TRANSCRIPT OF RECORD

SUPREME COURT OF THE UNITED STATES

OCTOBER TERM, 1928

No. 37

INDEPENDENT WIRELESS TELEGRAPH COMPANY,
PETITIONER,

vs.

RADIO CORPORATION OF AMERICA.

ON A WRIT OF CERTIORARI TO THE UNITED STATES CIRCUIT COURT OF APPEALS FOR THE FIFTH CIRCUIT.

FILED JANUARY 21, 1929.

GEORGE WYTHE RICHARDSON, PRINTER, 1929.

[illegible]

(30,400)

SUPREME COURT OF THE UNITED STATES

OCTOBER TERM, 1924

No. 435

INDEPENDENT WIRELESS TELEGRAPH COMPANY, PETITIONER,

vs.

RADIO CORPORATION OF AMERICA

ON A WRIT OF CERTIORARI TO THE UNITED STATES CIRCUIT COURT OF APPEALS FOR THE SECOND CIRCUIT

INDEX

JUDD & DETWEILER (INC.), PRINTERS, WASHINGTON, D. C., DECEMBER 30, 1924

[fol. 1] **IN UNITED STATES DISTRICT COURT, SOUTHERN DISTRICT OF NEW YORK**

In Equity.

RADIO CORPORATION OF AMERICA and DE FOREST RADIO TELEPHONE & TELEGRAPH COMPANY, Plaintiffs,

vs.

INDEPENDENT WIRELESS TELEGRAPH COMPANY & AMERICAN TELEPHONE & TELEGRAPH COMPANY, Defendants

On De Forest Patents Nos. 841,387 and 879,532

BILL OF COMPLAINT

To the Honorable the Judges of the District Court of the United States for the Southern District of New York:

The plaintiffs, by this bill of complaint, allege as follows:

1. That the above named plaintiffs are both corporations duly organized and existing under and by virtue of the laws of the State of Delaware, and citizens, residents, and inhabitants of said State.

2. On information and belief, that the above named defendant, Independent Wireless Telegraph Company, is a corporation organized and existing under and by virtue of the laws of the State of Delaware, [fol. 2] and is a citizen and resident of said State, but has a regular and established place of business in the Southern District of New York, where it has committed some of the acts of infringement complained of herein.

3. On information and belief that the above named defendant American Telephone & Telegraph Company is a corporation organized and existing under and by virtue of the laws of the State of New York, and is a citizen of said State and a resident and inhabitant of the Southern District of New York.

4. That the defendant American Telephone & Telegraph Company, as hereinafter alleged, has certain rights and interests in the patents in suit; that before bringing this suit, said defendant was requested to consent to join as a co-plaintiff herein, but declined and is therefore made a defendant.

5. That this is a suit in equity brought under the Patent Laws of the United States for infringement of the hereinafter mentioned United States Letters Patent No. 841,387, issued January 15, 1907, and No. 879,532, issued February 18, 1908.

6. Upon information and belief, that Lee De Forest, being then a citizen of the United States, and, under the laws of the United

States then in force, the first, true, original and sole inventor of certain new and useful improvements in "Devices for Amplifying Feeble Electric Currents" and certain new and useful improvements in "Space Telegraphy," did, on October 25th, 1906, and on January 29th, 1907, respectively, duly make and file applications in writing [fol. 3] with the Commissioner of Patents upon said improvements, and that at the time of making said applications, said improvements had not been known or used by others in this country, and had not been patented or described in any printed publication in this or any foreign country before his invention or discovery thereof, or more than two years prior to his applications aforesaid, respectively, and had not been in public use or on sale in this country for more than two years prior to his applications aforesaid, respectively, and had not been patented in any country foreign to the United States on any application filed by him or his legal representatives or assigns more than twelve months prior to his applications aforesaid respectively.

7. That said Letters Patent numbered 841,387 were, on January 15, 1907, duly issued upon the aforesaid application filed October 25, 1906, and that Letters Patent numbered 879,532 were, on February 18, 1908, duly issued upon the aforesaid application filed January 29, 1907, all the provisions and requirements of the statutes of the United States in such cases made and provided having been duly complied with, said patents being issued to said Lee De Forest, his heirs and assigns, whereby there was granted to him and them for the term of seventeen years from the respective dates thereof, the right to exclude others from making, using and selling, the inventions and improvements set forth, described and claimed therein, throughout the United States and the Territories thereof.

[fol. 4] 8. Upon information and belief, that by mesne instruments in writing, duly executed, delivered, and recorded in the United States Patent Office, the entire right, title, and interest in, to, and under said Letters Patent Nos. 841,387 and 879,532, except certain licenses then outstanding in the defendant, American Telephone & Telegraph Company, was duly transferred from said De Forest to and prior to March 16, 1917, and became vested in the plaintiff, De Forest Radio Telephone & Telegraph Company, its successors and assigns; that on or about March 16, 1917, by an agreement in writing, duly executed, delivered and recorded in the United States Patent Office, the plaintiff, De Forest Radio Telephone & Telegraph Company, transferred to the Western Electric Company, Inc., a New York corporation, its successors and assigns, a license under said Letters Patent Nos. 841,387 and 879,532, said license being granted for the full term of said patents; and that, on or about the 24th day of May, 1917, by an instrument in writing, duly executed, delivered and recorded in the United States Patent Office, said Western Electric Company, Inc., sold, assigned, and transferred to the defendant, American Telephone & Telegraph Company, its successors, legal representatives and assigns, all its right, title, and interest in, to, and under said agreement of March 16, 1917, be-

tween said plaintiff, De Forest Radio Telephone & Telegraph Company and said Western Electric Company, Inc.

9. That by virtue of an agreement in writing between the plaintiff [fol. 5] Radio Corporation of America, and the General Electric Company, a New York Corporation, dated November 20, 1919; and by virtue of an agreement in writing between the defendant American Telephone & Telegraph Company and said General Electric Company, dated July 1, 1920; and by virtue of an agreement in writing between the plaintiff Radio Corporation of America and the defendant American Telephone & Telegraph Company and said General Electric Company and said Western Electric Company, Inc., dated July 1, 1920, all of which agreements were duly executed and delivered, the plaintiff, Radio Corporation of America, acquired certain licenses under said Letters Patent Nos. 841,387 and 879,532, including an exclusive license (except for certain non-exclusive and non-transferable rights of the plaintiff, De Forest Radio Telephone & Telegraph Company) to sell and use radio devices, vacuum tubes, etc., embodying the inventions of said Letters Patent, for radio amateur use and for wireless telegraph uses, and including an exclusive license to use the inventions of said Letters Patent, or any material parts thereof, for commercial wireless telegraph purposes throughout the United States and its territories during the full term of said Letters Patent.

10. Upon information and belief, that the plaintiffs and the defendant American Telephone & Telegraph Company continue to hold their respective rights, titles, interests, and licenses, as aforesaid, in, to and under said Letters Patent Nos. 841,387 and 879,532 at the times of the infringement complained of herein, and now hold the same.

[fol. 6] 11. That the plaintiffs pray that the aforesaid Letters Patent, instruments, agreements and licenses, may be deemed and taken as a part of this bill of complaint, and the plaintiffs ask leave to refer to the originals of the same or duly authenticated copies thereof, now in their possession, or ready in court to be produced, copies of said Letters Patent being annexed hereto.

12. That the inventions of said Letters Patent Nos. 841,387 and 879,532 are being practiced by the plaintiffs and are of great value, importance, benefit and advantage to the public, the plaintiffs and the defendant American Telephone & Telegraph Company; and that the public generally have acknowledged and acquiesced in the exclusive rights granted by said Letters Patent.

13. That the said inventions and improvements or discoveries of said Letters Patent Nos. 841,387 and 879,532 are capable of conjoint use in one and the same device, and, on information and belief, have been and are now being so used in the infringement hereinafter complained of herein.

14. On information and belief, that, since said Letters Patent Nos. 841,387 and 879,532 were granted respectively, the vacuum tubes,

detectors, amplifiers and devices embodying the inventions of said Letters Patent respectively, which have been made and sold or used thereunder, have been marked by fixing thereon the word "Patented," together with the days and years in which said Letters Patent were granted respectively.

15. Upon information and belief, that the Marconi Wireless Telegraph Company of America, formerly a New Jersey corporation, be- [fol. 7] tween April 1902 and November 1919, was engaged in manufacturing, using and selling radio apparatus, and in constructing, maintaining and operating for pay and profit in the United States a chain of commercial wireless telegraph shore stations equipped with wireless telegraph apparatus embodying various inventions of United States Letters Patent owned by said Marconi Company or under which it was duly licensed; that such stations extended along the shore of the Atlantic and Pacific Oceans, the Gulf of Mexico and the Great Lakes within the United States, and that between April 1902 and November 1919 said stations were used principally in transmitting to and receiving from ships and vessels wireless telegraph communications and commercial toll messages for pay and profit by means of said patented apparatus, including vacuum tubes; that said shore stations also performed highly important and useful work between such ships and shore, and in saving life and property at sea and on the Great Lakes and in rendering service to the owners of such ships and the crews and passengers thereon, and that the Marconi Company, in November, 1919, owned or operated sixty of such shore stations and had an extensive toll business in paid messages from and to such shore stations, and a large amount of capital invested therein. That about November 1919 the plaintiff Radio Corporation of America succeeded to such shore to ship business of said Marconi Company and acquired certain of its assets, including all of its patents and patent rights and its said shore stations and ship radio stations.

[fol. 8] 16. That the plaintiff Radio Corporation of America has been, prior to and since July 1, 1920, and is now continuing the business it acquired from said Marconi Company, and acting under the aforesaid rights and licenses it acquired in and under said De Forest Patents Nos. 841,387 and 879,532, has been since that date and is now, engaged in the United States in constructing, maintaining and operating commercial wireless telegraph shore stations equipped with apparatus employing the inventions and vacuum tubes of said Letters Patent Nos. 841,387 and 879,532, in commercial wireless telegraph communication for pay and profit between such shore stations and vessels at sea and on the Great Lakes and the waters tributary thereto; that the said plaintiff Radio Corporation of America has a profitable business in said system of wireless telegraph communication and has a large amount of capital invested therein; that such shore stations are fully equipped to transmit and receive, by means of radio apparatus, including said vacuum tubes, all wireless telegraph communications to and from such vessels,

and such stations through means of said apparatus have performed and are now performing important work in saving life and property at sea and on the Great Lakes and in rendering service to the owners, crews and passengers of vessels.

17. On information and belief that the vacuum tubes for radio purposes, made under and in acordance with said Letters Patent Nos. 841,387 and 879,532, and sold for amateur or experimental use, have been marked in clear, legible type with a notice limiting and [fol. 9] restricting their use to amateur and experimental purposes only, and that ever since July 1, 1920, the vacuum tubes for radio purposes made under and in accordance with said Letters Patent and sold by the plaintiff Radio Corporation of America for amateur or experimental use, have all been marked in clear, legible type with a notice containing the limitation or restriction under which each and every one of said tubes were licensed for sale and use and under which they were purchased or acquired, and which notice was and is as follows:

"Licensed for amateur or experimental use only."

18. That, ever since July 1, 1920, the said vacuum tubes for radio purposes, sold or disposed of by the plaintiff Radio Corporation of America under said Letters Patent Nos. 841,387 and 879,532, for amateur or experimental use, have always been sold in packages or cartons marked in clear, legible type with the aforesaid or a similar notice that said vacuum tubes were licensed for sale and use for amateur or experimental use only, and that the said limitation or restriction under which said vacuum tubes were licensed for sale and use, have always been brought conspicuously to the attention of the trade, jobbers, dealers, distributors, purchasers and users of said vacuum tubes by warning and statements in said plaintiff's advertisements, circulars and in catalogues and otherwise.

19. On information and belief, that prior to and ever since July 1, 1920, it has been a matter of general knowledge in the trade and [fol. 10] among jobbers, dealers, distributors, purchasers, and users of said vacuum tubes sold or disposed of under said Letters Patent Nos. 831,387 and 879,532, for amateur or experimental use, that each and every one of said tubes was licensed for sale or disposition and use for amateur or experimental uses only, and not for commercial purposes, or for use for pay or profit.

20. That the said restriction or limitation under which said vacuum tubes for amateur or experimental uses were and are licensed to be sold or disposed of and used by others, and under which they were and are purchased or acquired, are fair and reasonable and within the rights granted by said Letters Patent Nos. 841,387 and 879,532, and acquired by the plaintiff Radio Corporation of America thereunder, and that a violation of said license restriction or limitation by the use of said tubes for other or commercial purposes or for pay or profit in wireless telegraph communication, particularly

between shore and ships, immediately results in loss and injury to the plaintiff Radio Corporation of America and its rights under said Letters Patent, and in unlawful gain, profit, or advantage to such user of said tubes, and such loss and injury has resulted to said plaintiff, and that the defendant Independent Wireless Telegraph Company has acquired such gain, profit or advantage, by its acts of infringement hereinafter complained of.

21. On information and belief, that the defendant Independent Wireless Telegraph Company subsequent to July 1, 1920, and prior to the execution of this bill of complaint, purchased or acquired [fol. 11] vacuum tubes embodying the inventions and improvements of said Letters Patent Nos. 841,387 and 879,532, or material parts thereof, and which were made under said Letters Patent and sold or disposed of by the plaintiff Radio Corporation of America under its said license to be used for amateur or experimental purposes only, and which were marked with the aforesaid notice "Licensed for Amateur or Experimental Use Only."

22. On information and belief, that the above-named defendant, the Independent Wireless Telegraph Company, well knowing the aforesaid license restriction under which it purchased or acquired the vacuum tubes referred to in the last paragraph thereof, and well knowing that the use of such vacuum tubes was licensed for amateur or experimental purposes only, and without right or license, and in infringement of the plaintiff's rights in said Letters Patent Nos 841,387 and 879,532, has since July 1, 1920, and prior to the execution of this complaint, used said tubes at its shore wireless telegraph stations within the Southern District of New York and State of New York, and elsewhere within the United States, in receiving commercial wireless telegraph communications or wireless telegraph messages for pay or profit, particularly from ships or vessels, and is now using said tubes at its said shore stations in such wireless telegraph communication, and is now threatening to continue said use of such tubes.

23. On information and belief, that the defendant the Independent Wireless Telegraph Corporation has derived and will derive from [fol.12] the aforsaid infringement complained of herein, gains, profits and advantages, but to what amount the plaintiffs are ignorant and cannot set forth; that by reason of the said infringement the plaintiff Radio Corporation of America has been and will be deprived and prevented from receiving gains, profits and advantages to which said plaintiff is lawfully entitled, and which it would have derived and received, and would now be deriving and receiving, but for the aforesaid infringement; that by reason of the aforesaid infringement the plaintiff Radio Corporation of America has been irreparably injured and has sustained and will sustain damages and losses; and that unless the aforesaid infringement is immediately enjoined by a writ of injunction, further and irreparable injury, loss and damage will be caused to the plaintiff the Radio Corporation of America.

24. On information and belief, that the defendant, the Independent Wireless Telegraph Company, prior to the commencement of this suit, had notice of said Letters Patent Nos. 841,387 and 879,532, and of the aforesaid infringement thereof, but notwithstanding said notice is now continuing said infringement.

25. That the plaintiff De Forest Radio Telephone & Telegraph Company, as hereinbefore alleged has certain rights in the patents in suit herein; that before filing this bill of complaint said De Forest Radio Telephone & Telegraph Company was requested to consent to join as a co-plaintiff herein, but declined; that said De Forest Radio Telephone & Telegraph Company is not within the jurisdic- [fol. 13] tion of the Court and therefore cannot be made a defendant herein; and that therefore to prevent a failure of justice, and to enable the plaintiff Radio Corporation of America to protect its exclusive rights under the patents in suit, said De Forest Radio Telephone & Telegraph Company is made a plaintiff herein without its consent.

Wherefore the plaintiffs pray:

1. That the defendant the Independent Wireless Telegraph Company and its officers, attorneys, associates, clerks, servants, agents, workmen and employees, may be pendente lite and perpetually enjoined and restrained by the decree of this Court from directly or indirectly installing or causing to be installed, using or causing to be used, selling or causing to be sold, for commercial purposes, or for pay or profit, in wireless telegraph communication between shore and ships, any vacuum tubes, detectors or amplifiers made under said Letters Patent Nos. 841,387 and 879,532 and embodying or employing the inventions and improvements thereof, or any substantial, material or vital part of parts thereof, and sold or disposed of under a license limitation or restriction to be used for amateur or experimental purposes only.

2. That the defendant the Independent Wireless Telegraph Company may be decreed to account to the plaintiffs and the defendant American Telephone & Telegraph Company, as their interests shall appear, for all such gains, profits and advantages as have accrued to or have been earned or received by said defendant, and also all [fol. 14] damages the plaintiffs, and the defendant American Telephone & Telegraph Company, as their interests may appear, have sustained by reason of said infringement, and that this Court will assess the same, or cause them to be assessed under its direction, and will increase the same in its discretion as provided by law.

3. That the defendant the Independent Wireless Telegraph Company may be decreed to pay the costs, charges and disbursements of this suit.

4. That the plaintiffs and the defendant American Telephone & Telegraph Company may have such other or further relief as premises

and the equity of the case may require and to the Court may seem just.

Radio Corporation of America, by Wm. Brown, Its Vice President. Sheffield & Betts, Solicitors for Plaintiff Radio Corporation of America, 52 William Street, New York, N. Y. L. F. H. Betts, of Counsel for Plaintiff Radio Corporation of America.

[fols. 15 & 16] Jurat showing the foregoing was duly sworn to by Wm. Brown omitted in printing.

(Here follows Exhibit to Bill of Complaint, marked side folio pages 16, 16-1, 16-2, 16-3, 16-4, 16-5, 16-6, and 16-7)

[fol. 17] IN UNITED STATES DISTRICT COURT

[Title omitted]

ORDER FOR BILL OF PARTICULARS

On the pleadings and proceedings heretofore had herein and on the notice of motion and motion for bill of particulars herein, dated May 9, 1923, and after hearing W. H. Taylor, Jr., Esq., of counsel for defendant Independent Wireless Telegraph Company in support thereof and Abel E. Blackmar, Jr., Esq., of counsel for the plaintiff Radio Corporation of America, in opposition thereto, it is now, on motion of Pennie, Davis, Marvin & Edmonds, solicitors for said defendant, hereby

Ordered, that the said plaintiff Radio Corporation of America served upon the solicitors for the said defendant Independent Wireless Telegraph Company, within ten (10) days from the date hereof, and file a bill of particulars which shall set forth fully, particularly, and specifically the following:

1. The claims of the patent in suit No. 841,387 upon which said plaintiff intends to rely to support its allegation of infringement;

[fol. 18] 2. The claims of the patent in suit No. 879,532 upon which plaintiff intends to rely to support its allegation of infringement;

3. What instruments in writing, assignments and licenses are referred to in paragraph 8 of the bill of complaint herein, together with copies of any of said instruments in writing, assignments and licenses which are not on record in the United States Patent Office (it being stipulated that, as to documents which are on record in said Patent Office, it will be sufficient for said plaintiff to identify such documents by their dates, the parties thereto, and the dates and places of record thereof);

No. 841,387. PATENTED JAN. 15, 1907.

L. DE FOREST.

DEVICE FOR AMPLIFYING FEEBLE ELECTRICAL CURRENTS.

APPLICATION FILED OCT. 25, 1906.

2 SHEETS—SHEET 1.

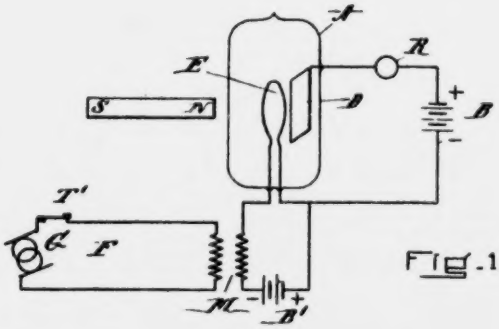

Fig. 1.

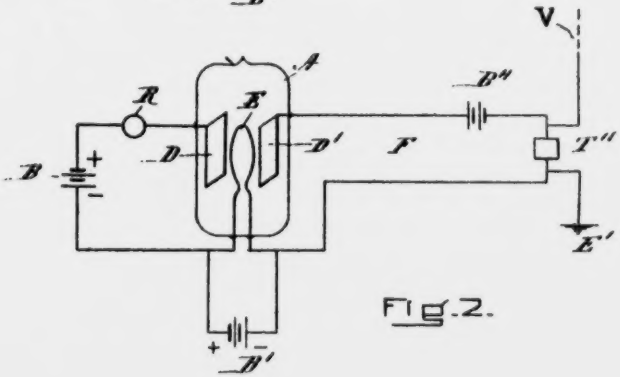

Fig. 2.

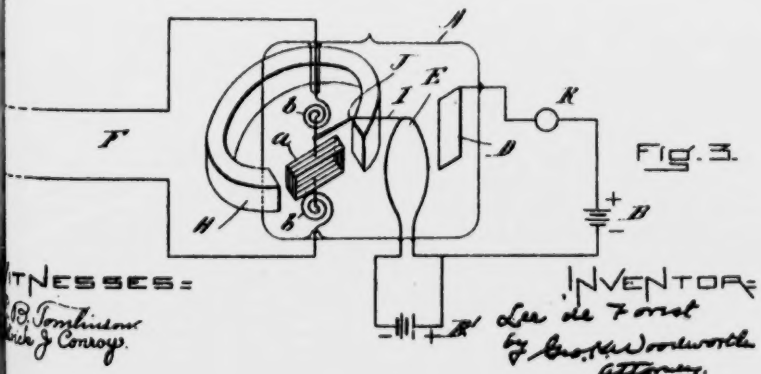

Fig. 3.

WITNESSES:
R. P. Tomlinson
Chas. J. Conroy.

INVENTOR:
Lee de Forest
by Geo. H. Woodworth
Attorney.

16-1

No. 841,387. PATENTED JAN. 15, 1907.

L. DE FOREST.

DEVICE FOR AMPLIFYING FEEBLE ELECTRICAL CURRENTS.

APPLICATION FILED OCT. 25, 1906.

2 SHEETS-SHEET 2.

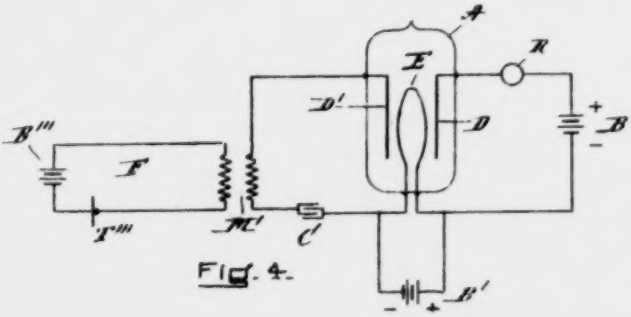

Fig. 4.

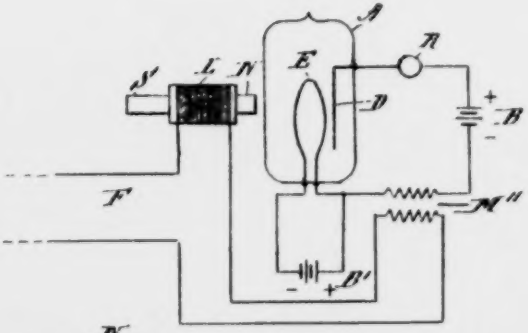

Fig. 5.

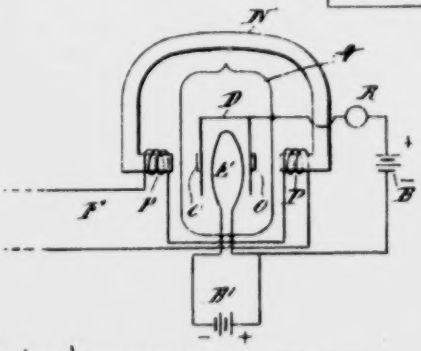

Fig. 6

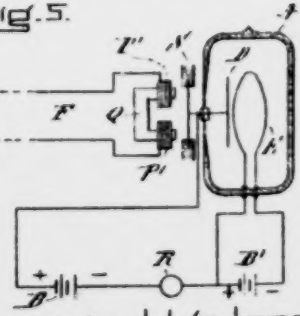

Fig. 7.

WITNESSES:
E. B. Tomlinson
Patrick J. Conroy

INVENTOR:
Lee de Forest
by Geo. H. Woodworth
Attorney

UNITED STATES PATENT OFFICE.

LEE DE FOREST, OF NEW YORK, N. Y.

DEVICE FOR AMPLIFYING FEEBLE ELECTRICAL CURRENTS.

No. 841,387. Specification of Letters Patent. Patented Jan 15, 1907.

Application filed October 25, 1906. Serial No. 340,467.

To all whom it may concern:

Be it known that I, LEE DE FOREST, a citizen of the United States, and a resident of New York, in the county of New York and State of New York, have invented a new and useful Improvement in Devices for Amplifying Feeble Electrical Currents, of which the following is a specification.

My invention relates to devices for amplifying feeble electrical currents—such, for example, as telephone-currents; and its object is to produce an amplifying device of greater efficiency and simplicity than those heretofore employed.

My invention will be described with reference to the drawings accompanying and forming a part of this specification, and in which—

Figures 1, 2, 3, 4, 5, 6, and 7 represent conventionally or diagrammatically various arrangements of apparatus and circuits whereby my invention may be carried into effect.

In the figures, A represents an evacuated vessel inclosing a sensitive conducting gaseous medium maintained in a condition of molecular activity.

R is a signal-indicating device.

B B′ are batteries or other sources of electrical energy.

D E D′ are electrodes sealed within the receptacle A.

The circuit B R D E is a local receiving-circuit. The circuit F is a line-circuit conveying the currents to be amplified to the amplifying device. The electrode E, which may be of platinum, tantalum, carbon, or other suitable material, is heated and preferably maintained incandescent by the battery B′. The electrodes D and D′, which may be plates of platinum or other suitable material, are placed in close proximity to the electrode E, and when the electrode D′ is employed its separation from the electrode E preferably is less than that of the electrode D therefrom.

In Fig. 1, N S represent a magnet placed adjacent to the vessel A. The currents to be amplified may be impressed upon the circuit which includes the heated electrode or filament E—as, for example, by means of the transformer M—and the magnetic field set up by these currents reacts upon the field set up by the magnet N S, thereby causing a slight variation in the separation between the electrodes D E. I have found that the slightest variation in the separation of the hot and cold electrodes produces a large and disproportionately greater variation in the flux between said electrodes, especially if the latter are close together, and such variation in flux may be made manifest by the signal-indicating device R.

In Fig. 2 the current to be amplified may be impressed upon the medium intervening between the electrodes D and E, and thereby alter, by electrostatic attraction, the separation between the electrodes. In this case D′ may be a strip of platinum-foil, and the slightest approach thereof toward the filament will act to slightly cool the gaseous medium, and thereby alter the current in the local circuit, or, if D′ is rigid, the increase in electrostatic attraction between D′ and E will cause E to recede from D, and thereby alter the current in the local circuit.

In Fig. 3 the filament E is connected, by means of a minute platinum wire I, to the arm J, which is secured to the coil *a*, placed between the poles of the magnet H and secured to the walls of the vessel A through the spiral springs *b b*. The line-current to be amplified in this case is passed through the coil *a* through the springs *b b*, and the resulting rotation of the coil varies the separation between the electrodes D E, thereby altering the current in the local circuit.

In Fig. 4 the currents to be amplified may be impressed upon the gaseous medium intervening between D′ and E by means of the transformer M′. A condenser C may be included in series with the secondary of said transformer and the electrodes D′ E. In this case there may or may not be a variation between the separation of the electrodes, and the currents to be amplified may vary the motions of the ions around the filament, thereby controlling to a greater degree the flux between said filament and the electrode D.

In Fig. 5 the currents to be amplified may be passed through the solenoid surrounding the magnet N S, and thereby vary the field, which by coacting with the magnetic field surrounding the electrode E determines the normal separation of the electrodes D and E. Even without creating actual movements between the electrodes D and E the varying magnetic flux produced by the line-current passing through the solenoid L will affect the motion of the ions in the gaseous medium, and thereby alter the current in the local circuit.

In Fig. 6 the electrode D may be consti-

tuted of iron or may consist of platinum plates provided with small iron armatures O O. In either case the currents to be amplified by passing through the solenoids P P, which surround the poles of the magnet N, effect the desired variation in the separation of the electrodes D and E.

In Fig. 7 the electrode D and diaphragm S may both be rigidly secured to the inside and outside, respectively, of the glass wall of the vessel A at a point where said wall has been flattened and made very thin, like the crystal of a watch. The currents to be amplified in this case by operating upon the coils P′ P′, surrounding the magnet Q, effect slight movements of the diaphragm S, and these movements are mechanically transmitted through the glass wall of the vessel A to the electrode D, thereby varying the current in the local receiving-circuit.

It will be obvious that the amplifying device, which constitutes the subject-matter of the present invention, is not limited in its use to any particular kind of electrical circuit or apparatus, but that it is capable of general application wherever an amplifying device is required. By way of example of its application to a wire telegraph or cable system I have shown the line F in Fig. 1 as including a telegraph transmitting-key T′ and source of vibratory current G. In Fig. 2 I have shown the line F as constituting the local circuit of a wireless-telegraph receiving system including the battery B″ and oscillation-detector T″, the latter being connected in series with an antenna V and the earth E′. In Fig. 4 I have shown the line F as constituting a telephone-circuit including the microphone-transmitter T‴ and battery B‴. In all instances it will be understood by those skilled in the art and without going into further detail that the signal-indicating device R, which is included in the local receiving-circuit, may be any device suitable for the purpose of reproducing the signal initiated in the line F.

I do not limit myself to any of the specific embodiments of my invention herein described, inasmuch as many modifications will readily occur to those skilled in the art without departing from the principle of my invention.

I claim—

1. In a device for amplifying electrical currents, an evacuated vessel inclosing a sensitive conducting gaseous medium maintained in a condition of molecular activity, two electrodes sealed within said vessel, a local receiving-circuit associated with said electrodes, and means whereby the sepa said electrodes may be varied by the to be amplified.

2. In a device for amplifying electr rents, an evacuated vessel, two el sealed within said vessel, means for one of said electrodes, a local recei cuit associated with said electrod means whereby the separation of s trodes may be varied by the curre amplified.

3. In a device for amplifying electr rents, an evacuated vessel, two el sealed within said vessel, a circuit i a source of electric energy connect ries with one of said electrodes, a loca ing-circuit associated with said el and means whereby the separation electrodes may be varied by the cu be amplified.

4. In a device for amplifying electr rents, an evacuated vessel, three el s aled within said vessel, means for one of said electrodes, a local recei cuit including two of said electro means for passing the current to be a between one of the electrodes whi cluded in the receiving-circuit and electrode.

5. In a device for amplifying electr rents, an evacuated vessel inclosing a medium, means other than the rece ergy for maintaining said gaseous m a condition of molecular activity, m impressing the currents to be amplif said gaseous medium, and a local r circuit having its electrodes sealed said vessel.

6. In a device for amplifying electr rents, an evacuated vessel, a hea trode and two non-heated electrod within said vessel, the non-heated el being unequally spaced with respec heated electrode, a local receiving-c cluding said heated electrode and th the non-heated electrodes which greater separation from the heated e and means for passing the current t plified between the heated electrode other non-heated electrode.

In testimony whereof I have here scribed my name this 17th day of 1906

LEE DE FO

Witnesses:
RALPH POLK BUELL,
SIDNEY WILLIAMS

No. 879,532. PATENTED FEB. 18, 1908.

L. DE FOREST.

SPACE TELEGRAPHY.

APPLICATION FILED JAN. 29, 1907.

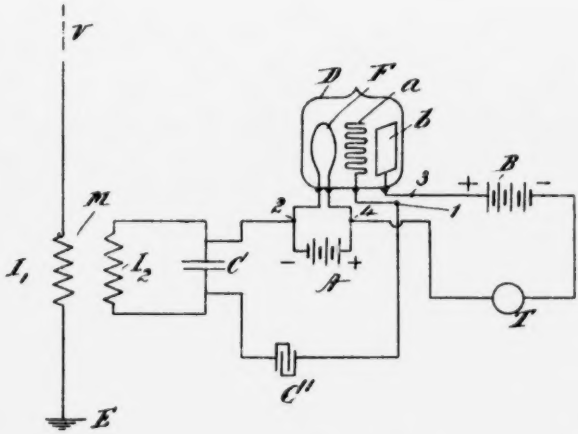

Fig. 1.

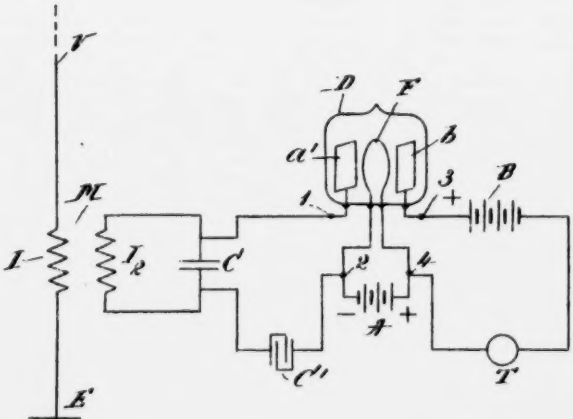

Fig. 2.

WITNESSES-
C. B. Tomlinson
Blanche J. Conroy

INVENTOR
Lee de Forest
by Geo. H. Woodworth
Atty.

16-5

UNITED STATES PATENT OFFICE.

LEE DE FOREST, OF NEW YORK, N. Y., ASSIGNOR, BY MESNE ASSIGNMENTS, TO DE FOREST RADIO TELEPHONE CO., A CORPORATION OF NEW YORK.

SPACE TELEGRAPHY.

No. 879,532. Specification of Letters Patent. Patented Feb. 18, 1908.

Application filed January 29, 1907. Serial No. 354,662.

To all whom it may concern:

Be it known that I, LEE DE FOREST, a citizen of the United States, and a resident of New York, in the county of New York and State of New York, have invented a new and useful Improvement in Space Telegraphy, of which the following is a specification.

My invention relates to wireless telegraph receivers or oscillation detectors of a type heretofore described in my prior Letters Patent Nos. 824,637, June 26, 1906 and 836,070, November 13, 1906.

The objects of my invention are to increase the sensitiveness of oscillation detectors comprising in their construction a gaseous medium by means of the structural features and circuit arrangements which are hereinafter more fully described.

My invention will be described with reference to the drawings which accompany and form a part of the present specification, although it is to be understood that many modifications may be made in the apparatus and systems herein described without departing from the principles of my invention.

In the drawings, Figure 1 represents in diagram a wireless telegraph receiving system comprising an oscillation detector constructed and connected in accordance with the present invention and Fig. 2 represents a space telegraph receiving system having a modified form of oscillation detector connected therein in a manner which constitutes one of the subjects matter of said invention.

V I_1 E is an elevated conductor system including the elevated conductor V, earth connection E, and primary I_1 of the transformer M, the secondary I_2 of which forms part of the tuned receiving circuit I_2 C. It will be understood of course that the aforesaid tuned receiving circuit may be associated with the elevated conductor system in any suitable manner.

D represents an evacuated vessel, preferably of glass, having sealed therein three conducting members, F, *a* and *b*, in Fig. 1 and F, *a'* and *b* in Fig. 2. The conducting member or electrode F is shown as consisting of a filament, preferably of metal, which is connected in series with the battery A or other source of electrical current of sufficient strength to heat said filament, preferably to incandescence. The conducting member *b*, which may be a plate of platinum, has one end brought out to the terminal 3. Interposed between the members F and *b* is a grid-shaped member *a*, which may be formed of platinum wire, and which has one end brought out to the terminal 1. The local receiving circuit, which includes the battery B, or other suitable source of electromotive force, and the signal indicating device T, which may be a telephone receiver, has its terminals connected to the plate *b* and filament F at the points 3 and 4 respectively. The means for conveying the oscillations to be detected to the oscillation-detector, are the conductors which connect the filament F and grid *a* to the tuned receiving circuit and, as shown, said conductors pass from the terminals 2 and 1 to the armatures of the condenser C.

I have determined experimentally that the presence of the conducting member *a*, which as before stated may be grid-shaped, increases the sensitiveness of the oscillation detector and, inasmuch as the explanation of this phenomenon is exceedingly complex and at best would be merely tentative, I do not deem it necessary herein to enter into a detailed statement of what I believe to be the probable explanation.

In associating an oscillation detector of the above mentioned type, said detector being now commonly known as the audion, with a closed tuned circuit, it will be noted by reference to Fig. 2, that the secondary I_2 closes a circuit containing a battery shown at B through the electrode *b*, conducting member *a'* and the conducting gaseous medium intervening between said electrode and member. Also by reference to Fig. 1, it will be seen that a similar closed circuit exists between said battery, and the electrode *b* and conducting member *a*. In order to close each of said circuits to the passage of direct current from the aforesaid battery therethrough, or to prevent the development of a difference of potential between the members *a* and *b*, or between *a'* and *b*, or to prevent the members *a* or *a'* from receiving an electrical charge from said battery, I insert the condenser C' in said otherwise mechanically closed circuit and find that the presence of said condenser produces a great increase in the sensitiveness of the oscillation detector as determined by the very marked increase in the sound produced in the telephone T

when said condenser is present over the sounds produced therein under the same conditions when said condenser is not employed.

It will be understood that the circuit arrangements herein described with reference to the particular forms of audion herein disclosed may with advantage also be employed with various other types of audion.

I claim:

1. An oscillation detector comprising an evacuated vessel, an electrode inclosed therein, means for heating said electrode, a second electrode inclosed within said vessel, a local circuit having its terminals electrically connected to said electrodes, a conducting member inclosed within said vessel and located between said electrodes, and means for conveying the oscillations to be detected to the first mentioned electrode and said conducting member.

2. An oscillation detector comprising an evacuated vessel, two electrodes inclosed within said vessel, means for heating one of said electrodes, and a conducting member inclosed within said vessel and interposed between said electrodes.

3. An oscillation detector comprising an evacuated vessel, two electrodes inclosed within said vessel, means for heating one of said electrodes, and a grid-shaped member of conducting material inclosed within said vessel and interposed between said electrodes.

4. An oscillation detector comprising an evacuated vessel, a filament sealed therein, a source of electrical energy connected in series with said filament, an electrode sealed in said vessel, a local circuit having its terminals connected to said filament and electrode, respectively, said local circuit including a source of electromotive force and a signal indicating device, a grid of conducting material sealed in said vessel and interposed between said filament and electrode, and means for conveying the oscillations to be detected to said filament and grid.

5. An oscillation detector comprising an evacuated vessel, an electrode inclosed therein, means for heating said electrode, a second electrode inclosed within said vessel, a local circuit having its terminals connected to said electrodes, a conducting member inclosed within said vessel and located between said electrodes, a closed circuit for conveying the oscillations to be detected to said first mentioned electrode and conducting member, and a condenser in said closed circuit.

6. An oscillation detector comprising an evacuated vessel, two electrodes inclosed therein, means for heating one of said electrodes, a conducting member inclosed within said vessel and interposed between said electrodes, means for establishing a difference of electrical potential between said electrodes and means for preventing said conducting member from becoming electrically charged.

7. An oscillation detector comprising an evacuated vessel inclosing a sensitive conducting gaseous medium, three conducting members inclosed therein, a closed oscillation circuit, a circuit connecting an element of said oscillation circuit with two of said members, a condenser in said circuit, a signal-indicating device, and a circuit connecting said device with one of said two members and with the third member.

8. An oscillation detector comprising an evacuated vessel, two electrodes inclosed therein, means for heating one of said electrodes, a conducting member inclosed within said vessel and interposed between said electrodes, means for establishing a difference of electrical potential between said electrodes and means for preventing the establishment of a difference of electrical potential between one of said electrodes and said conducting member.

9. An oscillation detector comprising an evacuated vessel, two electrodes inclosed therein, means for heating one of said electrodes, a grid of conducting material inclosed within said vessel and interposed between said electrodes, means for establishing a difference of electrical potential between said electrodes and means for preventing said grid from becoming electrically charged.

10. An oscillation detector comprising an evacuated vessel, two electrodes inclosed therein, means for heating one of said electrodes, a grid of conducting material inclosed within said vessel and interposed between said electrodes, means for establishing a difference of electrical potential between said electrodes and means for preventing the establishment of a difference of electrical potential between one of said electrodes and said grid.

11. An oscillation detector comprising an evacuated vessel, an electrode inclosed therein, means for heating said electrode, a second electrode inclosed within said vessel, a local circuit having its terminals electrically connected to said electrodes, a grid of conducting material inclosed within said vessel and located between said electrodes, and means for conveying the oscillations to be detected to the heated electrode and grid.

12. An oscillation detector comprising an evacuated vessel, an electrode inclosed therein, means for heating said electrode, a second electrode inclosed within said vessel, a local circuit having its terminals connected to said electrodes, a grid of conducting material inclosed within said vessel and located between said electrodes, a closed circuit for conveying the oscillations to be detected to the heated electrode and grid, and a condenser in said closed circuit.

13. An oscillation detector comprising an

evacuated vessel, an electrode inclosed therein, means for heating said electrode, a second electrode inclosed within said vessel, a local circuit having its terminals electrically connected to said electrodes, said local circuit including a source of electromotive force and a signal indicating device, a grid of conducting material inclosed within said vessel and located between said electrodes, and means for conveying the oscillations to be detected to the heated electrode and grid.

14. An oscillation detector comprising an evacuated vessel, two electrodes, one of which is a filament, inclosed within said vessel, means for heating said filament, and a conducting member inclosed within said vessel and interposed between said electrodes.

15. An oscillation detector comprising an evacuated vessel, two electrodes inclosed within said vessel, means for heating one of said electrodes, a grid of conducting material inclosed within said vessel and interposed between said electrodes, a local circuit connecting said electrodes, and a source of electromotive force and signal indicating device in said local circuit.

16. An oscillation detector comprising an evacuated vessel, two electrodes, one of which is a filament, inclosed within said vessel, means for heating said filament, and a grid of conducting material inclosed within said vessel and interposed between said electrodes.

17. An oscillation detector comprising an evacuated vessel, two electrodes inclosed within said vessel, means for heating one of said electrodes, a conducting member inclosed within said vessel and interposed between said electrodes, and a local circuit including a source of electromotive force connecting said electrodes.

18. An oscillation detector comprising an evacuated vessel, two electrodes inclosed within said vessel, means for heating one of said electrodes, a grid of conducting material inclosed within said vessel and interposed between said electrodes, a local circuit including a source of electromotive force connecting said electrodes and a signal indicating device associated with said local circuit.

19. An oscillation detector comprising an evacuated vessel, two electrodes, one of which is a filament, inclosed within said vessel, means for heating said filament, a grid of conducting material inclosed within said vessel and interposed between said electrodes and a local circuit including a source of electromotive force connecting said electrodes.

20. An oscillation detector comprising an evacuated vessel, two electrodes inclosed therein, means for heating one of said electrodes, a conducting member inclosed within said vessel, a closed oscillation circuit, a circuit connecting one element of said oscillation circuit with one of said electrodes and said conducting member, and a condenser in said circuit.

21. An oscillation detector comprising an evacuated vessel, two electrodes inclosed therein, means for heating one of said electrodes, a conducting member inclosed within said vessel, a closed oscillation circuit, a circuit connecting one element of said oscillation circuit with one of said electrodes and said conducting member, a condenser in said circuit, a signal indicating device and a circuit connecting said device with the other of said electrodes and said conducting member.

In testimony whereof, I have hereunto subscribed my name this 21st day of Dec: 1906.

LEE DE FOREST.

Witnesses:

THOMAS I. GALLAGHER.
HANS W. GOETZE.

4. The complete context of the agreement in writing between said plaintiff and the General Electric Company dated November 20, 1919, referred to in paragraph 9 of the bill of complaint herein (it being stipulated that, a copy of said agreement being already on file in this Court, it shall be sufficient for said plaintiff to refer thereto by stating the date of such filing together with the title and docket number of the suit in which it was filed);

5. The complete context of the agreement in writing between the defendant American Telephone & Telegraph Company and said General Electric Company dated July 1, 1920, referred to in paragraph 9 of the bill of complaint herein (it being stipulated that, a copy of said agreement being already on file in this Court, it shall be sufficient for said plaintiff to refer thereto by stating the date of such filing together with the title and docket number of the suit in which it was filed);

[fol. 19] 6. The complete context of the agreement in writing between said plaintiff, the defendant American Telephone & Telegraph Company, said General Electric Company, and Western Electric Company, Inc., dated July 1, 1920, referred to in paragraph 9 of the bill of complaint herein (it being stipulated that, a copy of said agreement being already on file in this Court, it shall be sufficient for said plaintiff to refer thereto by stating the date of such filing together with the title and docket number of the suit in which it was filed);

7. At what date apparatus embodying the inventions of Letters Patent Nos. 841,387 and 879,532 was first manufactured and sold by or on behalf of said plaintiff, which bore the patent notice set forth in paragraph 14 of the bill of complaint herein;

8. What shore stations are referred to in paragraph 15 of the bill of complaint herein and where are or were such shore stations located;

9. In what manner and by what means (including instruments in writing) did the said plaintiff succeed to the business of said Marconi Wireless Telegraph Company of America and acquire certain of its assets as set forth in paragraph 15 of the bill of complaint herein, and the context of said instruments in writing in so far as they refer to the transfer of the business and said assets of said Marconi Company;

10. What shore stations are referred to in paragraph 16 of the bill of complaint herein and where are said shore stations located;

11. What notices are referred to in paragraph 18 of the bill of com- [fol. 20] plaint herein other than that notice specifically set forth in paragraph 17 of the bill of complaint herein;

12. What notice has been marked on the packages or cartons containing apparatus manufactured under Letters Patent Nos. 841,387 and 879,532 as referred to in paragraph 18 of the bill of complaint herein other than the notice specifically set forth in paragraph 17 thereof;

13. What shore wireless telegraph stations of the defendant Independent Wireless Telegraph Company are referred to in paragraph 22 of the bill of complaint herein and where are said stations located;

It is hereby stipulated and agreed, in lieu of the particulars requested in paragraph 16 of the defendant's said notice of motion, that the defendant Independent Wireless Telegraph Company has, since July 1, 1920, and prior to the execution of the bill of complaint herein, purchased or acquired, and used, in the reception of commercial wireless telegraph communications and wireless telegraph messages for pay and profit, three-electrode vacuum tubes of the type known as "Radiotrons," said tubes being marked with a notice consisting of the words "Licensed for Amateur or Experimental Use Only"; that said vacuum tubes were so used at the shore station of the said defendant located within the Southern District of New York; and that the said vacuum tubes were used in an electrical circuit or circuits as illustrated, with the usual symbols, in the circuit diagram annexed hereto and marked "Exhibit A."

[fol. 21] It is hereby further ordered that the said motion of the defendant Independent Wireless Telegraph Company is in all other respects denied;

And it is hereby further ordered that the time of the said defendant within which to answer the bill of complaint herein or otherwise move shall be and the same hereby is extended to a date twenty (20) days subsequent to the filing by said plaintiff of the bill of particulars herein ordered.

Dated, New York, N. Y., August 24, 1923.

Wm. Bondy, U. S. D. J.

Approved as to form: Sheffield & Betts, Solicitors for plaintiff Radio Corporation of America. Pennie, Davis, Marvin & Edmonds, Solicitors for Defendant Independent Wireless Telegraph Company.

(Here follows Exhibit A, Circuit Diagram, marked side folio page 22)

[fol. 23] IN UNITED STATES DISTRICT COURT

[Title omitted]

BILL OF PARTICULARS

The following is the bill of particulars of the plaintiff Radio Corporation of America, filed in pursuance to the motion of the defendant Independent Wireless Telegraph Company argued herein on the 22nd day of May, 1923.

1. Plaintiff intends to rely, at the trial of this cause, upon claims Nos. 4 and 6 of Letters Patent No. 841,387.

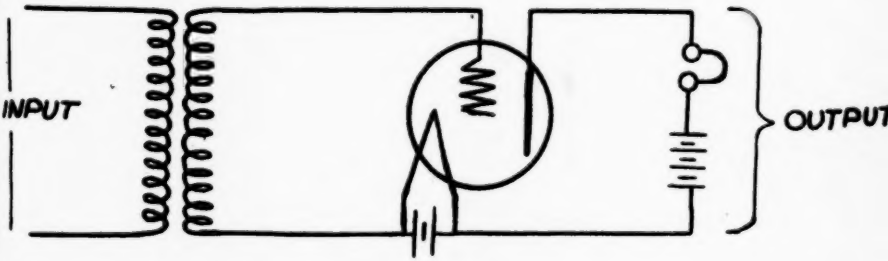

- EXHIBIT A -

2. Plaintiff intends to rely, at the trial of this cause, upon claims Nos. 1, 2, 3, 4, 11, 13, 14, 15, 16, 17, 18 and 19 of Letters Patent No. 879,532.

3. The instruments in writing, assignments, and licenses referred to in paragraph 8 of the bill of complaint herein are identified as follows:

[fol. 24]	Parties	Date	Date & place of recording
(a)	Lee De Forest & George K. Woodworth.	Jan. 24, 1907	Jan. 25, 1907, L. R-75, p. 327.
(b)	George K. Woodworth & De Forest Radio Telephone Company.	Jan. 11, 1908	Jan. 14, 1908, L. X-77, p. 422.
(c)	Resolution of Directors of North America Wireless Corporation.	July 1, 1913	Oct. 16, 1913, L. G-93, p. 95.
(d)	Extract from minutes of special meeting of directors of De Forest Radio Telephone Co.	July 22, 1913	Oct. 16, 1913, L. G-93, p. 95.
(e)	Minutes of Special meeting of Directors of Radio Telephone Company.	July 22, 1913	Oct. 16, 1913, L. G-93, p. 99.
(f)	De Forest Radio Telephone Company. Radio Telephone Co. of North American Wireless Corporation & Sidney S. Meyers.	July 26, 1913	Oct. 16, 1913, L. G-93, p. 102.
(g)	S. S. Meyers & American Telephone & Telegraph Co.	Oct. 6, 1913	Oct. 16, 1913, L. G-93, p. 107.
(h)	Radio Telephone Co. & Radio Telephone & Telegraph Co.	Dec. 20, 1913	Dec. 30, 1913, L. Z-93, p. 285.
[fol. 25] (i)	De Forest Radio Telephone Company, Radio Telephone Co., Radio Tel. & Tel. Co., North American Wireless Corporation, Lee De Forest, Charles M. De Forest & Sidney S. Meyers.	Aug. 7, 1914	Oct. 19, 1914, L. X-95, p. 449.
(j)	S. S. Meyers & American Telephone & Telegraph Co.	Oct. 3, 1914	Oct. 19, 1914, L. X-95, p. 467.
(k)	Radio Telephone Co. & Francis H. McGee.	Aug. 10, 1914	Aug. 26, 1914, L. Y-95, p. 343.
(l)	F. H. McGee & Peter Zimmerman.	Aug. 21, 1914	Aug. 26, 1914, L. Y-95, p. 352.

Parties	Date	Date & place of recording
(m) P. Zimmerman & Radio Telephone & Telegraph Co.	Aug. 24, 1914	Aug. 26, 1914, L. Y-95, p. 361
(n) De Forest Radio Telephone Co. & Radio Telephone & Telegraph Co.	Aug. 25, 1914	Sept. 14, 1914, L. D-95, p. 450.
(o) De Forest Radio Tel. &. Tel. Co., Lee De Forest & Western Electric Co., Inc.	March 16, 1917	March 27, 1917, L. U-102, p. 165.
[fol. 26] (p) Resolution of Board of Directors of De Forest Radio Tel. & Tel. Co.	March 16, 1917	March 27, 1917, L. U-102, p. 178.
(q) Resolution of Stockholders of De Forest Radio Tel. & Tel. Co.	March 19, 1917	March 27, 1917, L. U-102, p. 178.
(r) Western Electric Co., Inc., & American Telephone & Telegraph Co.	May 24, 1917	May 28, 1917, L. H-102, p. 375.

4. A complete copy of the agreement in writing between the plaintiff Radio Corporation of America and the General Electric Company, dated November 20, 1919, referred to in paragraph 9 of the bill of complaint herein, is on file in the Office of the Clerk of this Court in suit entitled Radio Corporation of America et al., vs. J. H. Bunnell & Co., Inc., et al., bearing Equity No. 25/113, said copy having been so filed on March 20, 1923.

5. A complete copy of the agreement in writing between the defendant American Telephone & Telegraph Company and the General Electric Company, dated July 1, 1920, referred to in paragraph 9 of the bill of complaint herein, is on file in the Office of the Clerk of this Court in suit entitled Radio Corporation of America, et al., vs. J. H. Bunnell & Co., Inc., et al., bearing Equity No. 25/113, said copy having been so filed on March 20, 1923.

6. A complete copy of the agreement in writing between the [fol. 27] plaintiff Radio Corporation of America, the defendant American Telephone & Telegraph Company, the General Electric Company, and Western Electric Company, Inc., dated July 1, 1920, referred to in paragraph 9 of the bill of complaint herein, is on file in the office of the Clerk of this Court in suit entitled Radio Corporation of America, et al., vs. J. H. Bunnell & Co., Inc., et al., bearing Equity No. 25/113, said copy having been so filed on March 20, 1923.

7. On information and belief, that apparatus embodying the inventions of Letters Patent Nos. 841,387 and 879,532, which bore the patent notice set forth in paragraph 14 of the bill of complaint herein, was first manufactured and sold by or on behalf of the plaintiff Radio Corporation of America on or about December 1, 1919.

8. The shore stations referred to in paragraph 15 of the bill of complaint herein and their locations are as follows:

Boston, Mass.
South Wellfleet, Mass.
Siasconset, Mass.
Sagaponack, L. I.
Seagate, L. I.
Cape May, N. J.
Philadelphia, Pa.
Baltimore, Md.
Virginia Beach, Va.
Cape Hatteras, N. C.
Savannah, Ga.
Jacksonville, Fla.
Miami, Fla.
Mobile, Ala.
New Orleans, La.
Port Arthur, Texas
Galveston, Texas
Tampa, Fla.
San Pedro, Calif.
San Francisco, Calif.
Eureka, Calif.
Avalon, Calif.
Astoria, Oregon
Seattle, Wash.
Juneau, Alaska
Ketchikan, Alaska
Jualin, Alaska
Chicago, Ill.
Cleveland, Ohio
Grand Haven, Mich.
Ludington, Mich.
Detroit, Mich.
Manistique, Mich.
Milwaukee, Wis.
Manitowoc, Wis.

[fol. 28] 9. Said plaintiff succeeded to the business of the Marconi Wireless Telegraph Company of America and acquired certain of its assets, as set forth in paragraph 15 of the bill of complaint herein, by means of an agreement in writing between said Marconi Company and said plaintiff, dated November 20, 1919; the context of said agreement, in so far as it refers to the transfer of the business and said assets of said Marconi Company, is as follows:

"It is desired that the Radio Corporation acquire all the assets of the Marconi Company, present and future, including its good will and business, rights of action, patent rights and all other rights and property to which it is now or may hereafter become entitled except the 'reserved assets' hereinafter described and the factory at Aldene, New Jersey, and except an amount in cash not exceeding five hundred thousand dollars ($500,000), sufficient to pay out of its surplus a dividend to its stockholders of twenty-five cents ($.25) per share. The assets to be acquired include a number of wireless stations among which are the stations at

New Brunswick, New Jersey,
Belmar, New Jersey,
Marion, Massachusetts,
Chatham, Massachusetts,
Bolinas, California,
Marshall, California,
Kahuku, Territory of Hawaii, and
Kokohead, Territory of Hawaii,

and a number of concessions and contracts (domestic and foreign), patents, patent rights, applications, etc., in various countries, all the stock of the

Wireless Press, Inc., a New York corporation,

[fol. 29] Marconi Telegraph-Cable Company, a New York corporation,

Marconi Telegraph-Cable Company, a New Jersey corporation,

Marconi Telegraph-Cable Company, a Massachusetts corporation,

Marconi Telegraph-Cable Company, an Illinois corporation,

and three-eighths of the stock of the Pan-American Wireless Telegraph and Telephone Company, a Delaware corporation. All claims and rights of action which the Marconi Company possesses being transferred by this present agreement to the Radio Corporation, it is understood and agreed that from such transfer there are reserved each and all of the claims or rights of action as follows and that in any proceeding with respect thereto the Marconi Company may sue in its own name, joining the Radio Corporation as complainant if necessary. The claims or rights of action enumerated below are the 'reserved assets' above referred to:

"a. A claim against the United States Government arising from unlicensed use by and for the Government of the apparatus covered by the patents of the Marconi Company.

"b. A claim now being determined in a suit pending in the United States District Court for the Southern District of New York entitled Marconi Wireless Telegraph Company of America vs. Atlantic Communication Company, on the Fleming patent No. 803,684.

"c. A claim against the Alien Property Custodian and the Treasurer of the United States arising out of the creation of a trust fund out of moneys belonging to the Gessellschaft fur die Drahtlose Tele- [fol. 30] graphie, under Section 9 of the 'Trading with the Enemy Act' by reason of infringement of Fleming patent No. 803,684, and Lodge patent No. 609,154 and Marconi patent No. 763,772.

"d. A claim now being determined in a suit in the United States District Court for the Eastern District of New York entitled Marconi Wireless Telegraph Company of America vs. Atlantic Communication Company, on Lodge patent No. 609,154 and Marconi patent No. 763,772.

"e. A claim now being determined in a suit entitled Marconi Wireless Telegraph Company of America vs. Kilbourne & Clark Manufacturing Company, in the United States District Court for the Western District of Washington, on Marconi patent No. 763,772.

"f. A claim now being determined in a suit entitled Marconi Wireless Telegraph Company of America vs. De Forest Radio Telephone and Telegraph Company in the United States District Court for the Southern District of New York, on Fleming patent No. 803,684.

"g. A claim against the British Government arising from the commandeering, on the outbreak of the European War, of the British stations erected to communicate with the corresponding stations of the America Company.

"The seven foregoing claims are herein collectively referred to as the 'reserved assets.' All the other assets of the Marconi Company which are to be acquired are herein collectively called the 'Marconi Assets.'

"The Marconi Company hereby transfers the Marconi assets to the Radio Corporation free and clear of all mortgages, liens, charges and encumbrances, and free of debt except current accounts payable."

[fol. 31] 10. The shore stations referred to in paragraph 15 of the bill of complaint herein and their locations are as follows:

Siasconset, Mass.
New York City (Bush Terminal).
New London, Conn.
Cape May, N. J.
San Francisco, Calif.
Los Angeles, "

In addition to the above mentioned stations, shore stations were formerly operated at 47 West Street, New York City, and at New Brunswick, N. J., both of which were discontinued about two years ago.

11. The notices referred to in paragraph 18 of the bill of complaint herein other than the notice specifically set forth in paragraph 17 thereof are those set forth in paragraph 12 of this bill of particulars.

(N. B.—Paragraph 14 of defendant's motion for a bill of particulars having been denied, copies of the "warning notices and statements" therein referred to are not intended to be set forth herein.)

12. On information and belief, the following are correct copies of all notices that, since July 1, 1920, have been placed on the packages or cartons in which vacuum tubes for radio purposes have been sold or disposed of by the plaintiff Radio Corporation of America under Letters Patent Nos. 841,387 and 879,532, for amateur or experimental use:

(1) "Audion vacuum tube for wireless telegraphy and telephony. Amateur use only for reception and amplification."

[fol. 32] (2) "Licensed only for amateur or experimental uses in radio communication. Any other use will be an infringement."

(3) "The tube herein contained is licensed for amateur or experimental use only."

(4) "Notice

"This device is not licensed except for amateur, experimental and entertainment radio use as set forth and to the extent indicated in the current issue of the catalogue of Radio Corporation of America. No express or implied license is granted under any patent owned by the Radio Corporation of America, or under which it is licensed to use or sell this device as an element or part of any combination or organization except as expressly set forth in said catalogue."

The patent license, referred to in notice No. (4) above set forth as being in the catalogue of the Radio Corporation of America, reads as follows:

"Patent License

"(1) Purchasers of tubes, grid leaks, transformers, condensers, or other parts, or of sets are not licensed by the Radio Corporation of America under any patents owned by the Radio Corporation of America, or under which it is licensed to use the same for commercial purposes. The sole license the purchaser of any such part or set obtains by the purchase thereof is to use it for amateur and experimental radio use involving no business feature and including broadcast reception of news and music and other entertainments but not broadcast transmission.

"(2) Purchasers of parts are given no license either express or [fol. 33] implied by reason of such purchase to assemble or make up sets or parts of sets which sets or parts of sets (as distinguished from the separate parts) infringe patents under which the Radio Corporation of America holds rights. The purchaser of a part is licensed by such purchase to use such part only and is not licensed under any patent covering a combination or organization composed of such part and other parts. The right under any patents relating to such a combination or organization to assemble parts into complete sets or to assemble in part such sets is reserved by the Radio Corporation of America, except to the extent that it from time to time permits amateurs to assemble sets under certain conditions as provided below.

"(3) To meet and develop the interest of amateurs in the radio art, such amateurs are, until further notice, authorized under the patents under which the Radio Corporation of America has the right to grant licenses, to assemble and use sets (but only for amateur and experimental radio purposes as above defined in section (1), provided the tubes forming elements of, or used with, such sets have been sold by the Radio Corporation of America or such other persons, if any, as have been authorized by it to manufacture and sell the same for use in the United States of America, and provided that such amateur does not use any assembled or partially assembled set, but himself assembles the various distinct parts.

"(4) No license under any such patent covering a combination or organization of elements is granted to replace any tubes in any set sold by the Radio Corporation of America or assembled under license from it, with other tubes not sold by the Radio Corporation of America."

[fol. 34] 13. On information and belief, the shore wireless telegraph stations of the defendant Independent Wireless Telegraph Company referred to in paragraph 22 of the bill of complaint herein, together with their locations, are as follows:

New London, Connecticut;
Easthampton, Long Island, New York;

East Moriches, Long Island, New York;
Babylon, Long Island, New York;
35 Water Street, New York City, New York.

Plaintiff Radio Corporation of America hereby prays leave to apply to this Court for leave to amend this bill of particulars as to paragraph 12 hereof if said plaintiff should hereafter learn of any additional notices, etc., that have been used as therein set forth.

Dated, New York, N. Y., August 28, 1923.

Radio Corporation of America, by Sheffield & Betts, Its Solicitors. L. F. H. Betts, of Counsel.

[fol. 35] AGREEMENT REFERRED TO IN PARAGRAPH 3(o) OF PLAINTIFF'S BILL OF PARTICULARS

Whereas, the De Forest Radio Telephone and Telegraph Company, a Delaware corporation, herein called the "De Forest Company," (being the same corporation formerly named "Radio Telephone and Telegraph Company"), represents that it owns and controls the entire right, title and interest (subject only to such rights as were granted to Sidney S. Meyers, his heirs and assigns, by certain agreements dated July 26, 1913, and August 7, 1914, respectively, which rights are now held by the American Telephone and Telegraph Company) in, to and under certain United States patents and applications for United States patents and inventions recited or intended to be recited in the list hereto attached and marked "Schedule A"; and

Whereas, the De Forest Company further represents that it owns certain rights or interest in, to or under certain other United States patents and applications for United States patents recited or intended to be recited in the list hereto attached and marked "Schedule B"; and

Whereas, the Western Electric Company, Incorporated, a New York corporation, herein called the "Western Company," is desirous of acquiring rights in all the inventions and rights to patents owned or controlled by the De Forest Company, and in all the patents and applications included in or intended to be included in the said Schedules A and B, and also in certain inventions (and the United States [fol. 36] patents that may be granted therefor, which may be made or conceived by Lee De Forest, during the period of seven years from and after the date hereof;

Now, in consideration of One Dollar ($1.00) and other good and valuable considerations paid to the said De Forest Company by the said Western Company, receipt whereof is hereby acknowledged, the said De Forest Company hereby, on behalf of itself and its successors, legal representatives and assigns, grants and agrees to grant to the Western Company, a license (free of royalties or other payments other than those herein specified) to make, use, install, operate and lease, and to sell or otherwise dispose of to others for sale, installa-

tion and operation, apparatus and systems embodying or made or operating in accordance with the following inventions: (1) All inventions owned or controlled by the said De Forest Company or to which it now is or may hereafter be legally or equitably entitled by reason of any existing agreements, under which it has or may have the right to transfer or grant licenses as herein expressed, among which inventions are specifically included (without excluding others) those enumerated in Schedules A and B; and (2) any and all inventions relating to apparatus, methods or systems adapted for use in wire or radio signaling or communication, or relating to the audion or other vacuum, rarified gas or vapor electric discharge device, or relating in anywise to electrical translating devices (such, for example, as oscillation generators, relays, repeaters, amplifiers, detectors, rectifiers, power limiting devices, X-ray apparatus, etc.), which may [fol. 37] be made or conceived by Lee De Forest during the period of seven years from and after the date hereof.

The said license is granted and to be granted under United States patents only, and for the full terms of the said patents granted or to be granted, and the license is granted for all transferable rights of said De Forest Company of any kind or nature whatsoever in said inventions, patents and applications, except the rights hereinafter expressly reserved to itself by the De Forest Company. The said license granted and to be granted to the Western Company is exclusive except for the aforesaid rights now held by the American Telephone and Telegraph Company and except for the rights expressly reserved herein by the De Forest Company.

The De Forest Company reserves to itself the following rights:

(1) Non-exclusive, assignable rights to make, use and sell for the synthetic production of music under such of the patents and applications of Schedules A and B as were filed prior to August 14, 1914;

(2) Exclusive, assignable rights to make, use and sell for the synthetic production of music its inventions covered by its patents, issued or to be issued for inventions disclosed in its applications filed subsequent to, and not prior to, August 14, 1914;

(3) Exclusive, non-transferable, personal rights, with respect to the generation of oscillating or pulsating currents for sending pur- [fol. 38] poses in radio-communication, to grant non-exclusive, non-transferable licenses to and to make apparatus for and sell apparatus to the Marconi Wireless Telegraph Company of America and any and all companies that may be owned or controlled by it under patents Nos. 1,201,270, 1,201,271 and 1,218,195 and applications Ser. Nos. 17,225, 27,771, 31,856, 41,332, 48,948, 48,949, 52,176, 75,928, 99,283, 104,074, 104,075, 150,221 and 150,027; such licenses or sales to the said Marconi Wireless Telegraph Company of America or to any of said companies that may be owned or controlled by it shall not, however, carry by implication or otherwise the right to use any of the other inventions covered by the patents and applications in said Schedules A and B; such exclusive rights to become non-exclusive if and when the said Marconi Wireless Telegraph Company of Amer-

ica grants a license to the De Forest Company under the Fleming patent No. 803,684 and the said right and any license granted thereunder to terminate with the expiration of said Fleming patent:

(4) Non-exclusive, non-transferable, personal rights with respect to radio-communication, under all the patents, applications and inventions included in this agreement, for the following purposes only:

(a) To make for and sell to the United States Government for its use;

(b) To make for and sell to amateurs for use solely by said amateurs:

[fol. 39] (c) To make for and sell to private users who do not, for pay, transmit or receive messages or establish communications, for use only in establishing communication between different offices or departments of the same business;

(d) To make and sell for use on ships which do not for pay transmit or receive messages or establish communications;

(e) To make and use for radio distribution of news and music;

(f) To make and sell for use receiving apparatus for the reception of said news and music but not for use in receiving messages for pay;

(g) To make, use and sell to others for use in the reproduction of words or music from telegraphone and graphophone records;

It is understood and agreed that, except with respect to apparatus furnished to the United States Government and to the said Marconi Wireless Telegraph Company of America, no apparatus shall be sold or leased by the De Forest Company under its reserved rights, except upon written agreement by the purchaser or lessee, as the case may be, that neither said apparatus as a whole, nor any part thereof shall be used in the commercial transmission or reception of messages for pay, or used by others than the original purchaser or lessee, or used for any purposes other than radio-communication.

The term "radio" as used herein is intended to be limited to such transmission of signals, communications or electrical effects as is [fol. 40] accomplished without the use of wire or other physical connection, except the natural media in space, between sending and receiving stations.

It is understood and agreed that all apparatus made, sold, leased, delivered, installed or used by the De Forest Company shall be permanently and conspicuously marked as patented, together with the date (day and year) of the patent or patents covering the same, and shall also be permanently and conspicuously marked with words, satisfactory to the Western Company, indicating the sole use to which it is to be put.

It is understood and agreed that the Western Company, its successors, legal representatives and assigns, and the De Forest Company may, respectively, institute and conduct suits against others for infringement of any of said patents within the fields in which

it possesses rights, but all of such suits shall be conducted at the expense of the party bringing them, which party shall be entitled to retain any judgment recovered in any such suits.

The De Forest Company covenants with and warrants to the Western Company, its successors and assigns, that said Schedule A is a complete list of all United States patents and applications for United States patents and inventions which it owns or controls, but if any such patents, applications or inventions are omitted from said Schedule A, they shall be added thereto as soon as the omission is discovered, and shall be deemed to be included therein. And the De Forest Company covenants with and warrants to the Western [fol. 41] Company, its successors and assigns that it owns and controls the entire right, title and interest in, to and under each and all of the patents, applications for patents and inventions listed or intended to be listed in said Schedule A, free and clear of any adverse assignment, grant, mortgage, license and every other encumbrance, except such rights as were granted as aforesaid to the said Sidney S. Meyers and are now held by said American Telephone and Telegraph Company and except a license heretofore granted to the Atlantic Communication Company (a New York corporation).

The De Forest Company further covenants and warrants that said Schedule B is a complete list of all United States patents, applications for United States patents and inventions (other than those recited in said Schedule A) in which it has any title or interest or in respect to which it has any transferable rights; but if any such patents, applications or inventions (except such as should be added to Schedule A) are omitted from said Schedule B they shall be added to the latter as soon as the omission is discovered, and shall be deemed to be included therein.

The De Forest Company further covenants and agrees that it will, whenever requested, and without further consideration, execute and deliver and cause to be executed and delivered all such further licenses and papers as the legal counsel of the Western Company may advise are necessary or convenient to perfect the license to the Western Company, its successors and assigns, herein conveyed or intended or agreed to be conveyed.

[fol. 42] The De Forest Company hereby gives to the Western Company the non-revocable right to examine and take copies of all of its applications now pending in the United States Patent Office, including those applications enumerated in said Schedules A and B, and all its pending applications filed or which may be filed in the United States Patent Office in the name of Lee De Forest for inventions conceived at any time prior to seven years from the date hereof; and the Commissioner of Patents is hereby authorized to permit the said Western Company to have access to said applications in accordance herewith. And the De Forest Company furthermore agrees to promptly furnish to the Western Company the serial number and date of filing of all such applications, and copies of all the Patent Office records thereof, including specifications, drawings, amendments and office actions.

It is understood and agreed that the Western Company, its

successors and assigns may transfer to others, in whole or in part, the rights granted by this instrument, and may assign rights hereunder, or grant licenses to various persons, firms or corporations for the several uses to which the inventions are applicable.

It is understood and agreed that the acceptance of this license by the Western Company shall not be construed as granting or implying the grant or surrender by it of any rights or licenses whatever under its patents granted or to be granted.

In witness whereof the parties hereto have caused this instrument to be executed on the 16th day of March, 1917, by their proper [fol. 43] officers thereunto duly authorized.

De Forest Radio Telephone and Telegraph Company, by Lee De Forest, President. Attest: Chas. Gilbert, Treasurer. Western Electric Company, Incorporated, by H. B. Thayer, President. Attest: Geo. C. Pratt, Secretary.

I, Lee De Forest, as an individual and as a director and stockholder in the De Forest Radio Telephone and Telegraph Company which has executed the foregoing instrument, hereby approve, ratify and confirm the licenses granted in the foregoing instrument, and also all provisions of that instrument; and to the extent of my present or future interest in, or control over, the said patents, applications and inventions, I for myself, my heirs, executors, legal representatives and assigns, hereby join and agree to join in the licenses above granted and agreed to be granted and further agree promptly to disclose to said Western Company all inventions which may be made or conceived by me within the period of seven years from the date hereof and to execute and deliver such licenses and other papers which may be reasonably necessary to vest in the Western Company [fol. 44] the rights which are herein granted or agreed to be granted.

Lee De Forest.

State of New York,
County of New York, ss:

On this 16th day of March, 1917, personally appeared before me Lee De Forest, personally known to me and known to me to be one of the persons who executed the foregoing instrument, and he acknowledged to me that he executed the same, and that the same constitutes his free act and deed for the uses and purposes therein set forth.

Jacob Satin, Notary Public, New York County, No. 24. Register No. 8059. Commission expires March 30, 1918.

[fol. 45] Instrument Referred to in Paragraph 3 (r) of Plaintiff's Bill of Particulars

The undersigned, the Western Electric Company, Incorporated, a New York corporation, in consideration of One Dollar ($1.00) and other good and valuable consideration to be paid by the American

Telephone and Telegraph Company, a New York corporation, the receipt of which is hereby acknowledged, has sold, assigned and transferred, and does hereby sell, assign and transfer to the said American Telephone and Telegraph Company, its successors, legal representatives and assigns, all the right, title and interest of the said Western Electric Company, Incorporated, in, to and under a certain agreement dated the 16th day of March, 1917, and executed and acknowledged by the De Forest Radio Telephone and Telegraph Company, the said Western Electric Company Incorporated and Lee De Forest, the said agreement relating to patents and inventions and being recorded in Liber U102, pp. 165-170 of Transfer of Patents of the United States Patent Office.

In witness whereof, the said Western Electric Company Incorporated has caused this instrument to be executed on the 24th day of May 1917, by its proper officers thereunto duly authorized.

Western Electric Company, Incorporated, by H. B. Thayer, President. Attest: Geo. C. Pratt, Secretary. (Seal.)

[fol. 46] AGREEMENT REFERRED TO IN PARAGRAPH 4 OF PLAINTIFF'S BILL OF PARTICULARS

Agreement made this 20th day of November, 1919, between General Electric Company, a New York corporation, hereinafter called the General Company, and Radio Corporation of America, a Delaware corporation, hereafter referred to as the Radio Corporation.

Recitals

A. The General Company has developed various inventions relating to, or applicable to, radio work and other communication work.

B. The General Company is under obligation to certain foreign companies to give them for their territory respectively exclusive rights to its various inventions and discoveries and to the business of selling General Electric products. Some of these companies are substantially controlled by the International General Electric Company, a New York, corporation hereinafter referred to as the International Company.

C. The Radio Corporation proposes to establish, maintain and operate radio stations, and cable and wire lines and stations, and to deal in, lease and maintain radio devices, and desires to utilize in such work the various inventions now controlled by the General Company and which may hereafter be controlled by it.

Article I.—Definitions

1. Radio purposes is defined as the transmission or reception of [fol. 47] communications, telegraphic, telephonic or other, by what are known as electromagnetic waves, but not by wire.

2. Radio devices are defined as comprising:

(a.) Devices useful only in radio purposes.

(b.) Devices especially adapted to radio purposes but capable of other uses, such, for example, as the Alexanderson alternator with accessories or the pliotron, except where the same are sold licensed only for uses other than radio uses in which case the same are not to be regarded as radio devices hereunder.

3. The expression "devices" shall include apparatus, devices, systems, connections and methods.

Article II.—Licenses

1. Reserving to itself and its controlled companies, present and future, respectively, personal licenses, transferable only to the successors to their business or part thereof and divisible only as their business is divided, to use for their own communication or other purposes for convenience or to save expense, but not for profit, the General Company hereby grants to the Radio Corporation an exclusive, divisible license to use and sell as well as a non-exclusive, indivisible license to make only when, and to the extent that, the General Company is not in a position to supply the desired device with reasonable business promptness (the right to use and sell being limited to the use and sale of apparatus purchased from the General [fol. 48] Company or with its written consent, so far as the General Company is from time to time in condition to supply the same with reasonable business promptness) for radio purposes under all patents, applications for patents, inventions and rights or licenses under or in connection with patents which the General Company now owns or controls, or which it may acquire during the term hereof except those acquired by purchase and referred to below.

2. The General Company also grants to the Radio Corporation a non-exclusive non-transferable license to use, but not to make or sell (with the same limitations) for wire communication purposes under all patents, applications, inventions, rights and licenses which it now owns or controls or which it may acquire during the term hereof by inventions of its employees.

3. For the purposes hereof the inventions, patents and rights of the General Company are taken as including those of the International Company as well as the following corporations, namely:

Australian General Electric Company,
China General Edison Company, Inc.,
Compania General Electric do Brazil,
South African General Electric Company, Ltd.,
Cia General Electric Sudamericana, Inc.,
Mexican General Electric Company.

4. The Radio Corporation grants to the General Company the exclusive, divisible right to make and to sell radio devices to the

[fol. 49] Radio Corporation only as well as the exclusive, divisible right to make, use and sell devices other than radio devices, under all its patents and applications for patents, inventions and rights or licenses unler or in connection with patents which the Radio Corporation now owns or controls, or which it may acquire during the term hereof except as far as is provided below in the case of certain such acquired by purchase. The Radio Corporation grants the General Company and its controlled companies, present and future, non-exclusive licenses transferable only to successors to their business or parts thereof, divisible only as their business is divided, to use for their own communication or other purposes for convenience or to save expense but not for profit under all the patents which the Radio Corporation now owns or controls or which it may acquire during the term hereof from the General Company or by inventions of its own employees or through contracts which it now has.

5. The said licenses are all to run for the terms for which the patents are or may be granted, reissued or extended, and are subject to royalty only in so far as such royalties are payable to others by virtue of the contracts by which the party granting the licenses acquired or shall acquire the right to grant the same, and only at a rate not greater than that paid by such party.

6. Where in any case a party does not own or control a patent but has lawful power to grant rights or licenses thereunder to the other for part or all of its field or territory it shall do so subject to the conditions hereof.

[fol. 50] 7. In case the General Company shall acquire by purchase from others patents, patent applications, or rights or licenses under or in connection with patents, useful for or applicable to radio purposes or wire communication, and in case the Radio Corporation similarly acquires such patents, patent applications, or rights or licenses, the party making the acquisition will offer to the other to bring the same within the scope of this contract on payment of a fair proportion of the price actually paid or to be paid therefor. This shall not apply in the case of any patent, patent application, right or license secured by the Radio Corporation from or through the Marconi Wireless Telegraph Company of America, Marconi's Wireless Telegraph Company, Limited, Compagnie Generale de Telegraphie Sans Fils, or others with whom the Radio Corporation may have relations similar to its actual or proposed relations with any of said companies; all such are to be treated as though they were not acquired by purchase.

8. The General Company has sold its inventions for certain countries to companies other than those mentioned in Section 3 of this article. All covenants of the General Company with respect to such countries are subject to the present rights of the companies holding such inventions. As such rights revert to the General Company they shall pass under the operation of this contract without further consideration.

9. Each company agrees to continue the present practice of the [fol. 51] General Company of requiring those employees considered likely to make inventions along this line of work to assign inventions to it; it being understood that each company shall use its best efforts to carry out this provision, but if due care and diligence are exercised neither company shall be liable in damages for failure to carry it out.

10. As soon as is reasonably possible after the filing by or on behalf of a party hereto of a United States patent application, rights to or under which should pass to the other party, the party filing the application shall transmit a copy thereof to the other party with a statement of its filing date and shall notify the other party of the countries foreign to the United States in which it has decided to file and will file applications to cover the invention of such application. The other party may then suggest that applications should be filed in additional foreign countries in which the first party has the right to file. If and so far as the first party does not within thirty (30) days after such suggestion agree to file in such other foreign countries the other party may file proper applications for protecting such invention in such other foreign countries, and take patents thereon in its own name at its own expense. Before either party intentionally drops an application or patent of any country, rights to or under which should pass to the other hereunder, it shall notify the other party in which case such other party may continue the prosecution of the application or continue the life of the patent in question at its own expense, [fol. 52] being entitled in such case to an assignment thereof.

11. In case a right, application or patent is transferred by one party to the other in accordance with the provisions of Section 10 of this article, the party with which such right, application or patent originated shall be entitled to its full rights thereunder as though such patent had originated with and had been taken out by the other party subject to any royalty or other payment required to be made to an outsider in accordance with this agreement.

12. The admission of validity implied in the acceptance of licenses and assignments hereunder is limited to the field and terms for which such licenses exist.

13. The General Company empowers the Radio Corporation to release the United States Government from any and all claims arising from past infringement by the Government of any radio patents which the General Company now owns or under which it has power to grant such release, provided that this can be done in a contract otherwise satisfactory to the General Company.

Article III.—Restrictions on Sale of Apparatus

1. The General Company agrees that it will not sell or dispose of any radio devices whatever covered by patents, rights under which are granted or agreed to be granted herein, for use in the United States except to fill orders now on hand, and except to the United

[fol. 53] State Government in cases where the Government insists on purchasing directly from the General Company (in which case the profits from such sales over the price of such devices to the Radio Corporation hereunder shall be paid to the Radio Corporation). The General Company further agrees that it will not sell or dispose of for use outside the United States any radio devices whatever covered by patents, rights under which are granted or agreed to be granted herein, except as it may be required to do so by existing contracts with others than the Companies specifically named in Section 3 of Article II hereof and except for its own use or for the use of the Radio Corporation. This reservation is not intented to enlarge the scope of the licenses granted in Article II hereof.

Article IV.—Sale of Apparatus

1. The Radio Corporation agrees to purchase from the General Company all radio devices covered by patents, rights under which are granted or agreed to be granted herein, which the General Company is from time to time in a position to supply with reasonable business promptness for use in, or which are used in, the business and operation of the Radio Corporation and its licensees and customers.

2. The General Company agrees to produce or cause to be produced such patented devices of good quality, workmanship, and material with reasonable business promptness on the written order of the Radio Corporation.

[fol. 54] 3. The basis for determining the price charged by the General Company to the Radio Corporation shall be cost plus 20%, except that for all articles complete in themselves which are purchased by the General Company from outside manufacturers and which form a necessary part of the complete device supplied by the General Company, the price charged by the General Company to the Radio Corporation shall be cost plus 10% for handling charges.

4. The basis for determining cost shall be in accordance with the "Standard Accounting and Cost System for the Electrical Manufacturing Industry," as approved by the Federal Trade Commission, January 27, 1917.

5. Terms of payment shall conform to the standard terms of the General Company current at the time of placing the order.

6. If the Radio Corporation in any particular instance wishes the General Company to make a definite and firm price for such radio devices, and the General Company consents to make such firm price, such firm price upon acceptance by the Radio Corporation shall be substituted in such instance or instances for the cost plus 20% arrangement above mentioned.

7. All prices mentioned above shall be f. o. b. factory.

8. Standard material not specially designed for radio purposes is to be sold to the Radio Corporation at standard prices and on standard

[fol. 55] terms of payment but at the lowest price at which such standard material is sold in like quantities to any other customer of the General Company for use in the United States of America, and if at any time material, apparatus or supplies especially designed for radio purposes shall be sold by the General Company to its other customers for other uses than radio purposes in an amount greater than that taken by the Radio Corporation, the price at which such material, apparatus or supplies shall be sold to the Radio Corporation shall be the lowest price at which such material, apparatus or supplies are sold in like quantities to any other customers of the General Company for use in the United States of America. In determining such lowest price under this Section 8 no account shall be taken of sales:

(1) To those corporations in which the General Company may own a substantial amount of stock;

(2) Where the General Company sells material on a schedule, such material is to be billed to the Radio Corporation according to such schedule;

(3) Where the General Company has a lawful contract not to sell material below a certain price, such material is not to be billed to the Radio Corporation for a less price;

(4) To the United States Government or any of its departments.

9. It is agreed that the Radio Corporation shall not resell patented articles except as a part of the radio system.

[fol. 56] 10. The Radio Corporation agrees not to lease, sell or dispose of devices bought of the General Company, where the General Company or one of the companies mentioned in Section 3 of Article II hereof would not be free to sell such devices. It being understood that the rights of the Radio Corporation are only for radio purposes as above defined, the Radio Corporation agrees to use care not to enter with any patented device, process or system into the field of the General Company or to encourage or aid others to do so, and specifically that in selling radio devices it will use such precautions by contract of sale, restricted license notices, etc., as may be necessary or advisable to prevent its customers from acquiring (by purchase from it of devices or otherwise) licenses to use the same for purposes of which the Radio Corporation has no right to grant such licenses. The General Company agrees to observe similar precautions in selling apparatus and devices especially adapted to radio work but capable of other uses.

11. The General Company agrees to sell the Radio Corporation such patented communication devices as it may be in position to supply other than radio devices on the same terms, but only for the use of the Radio Corporation and not for resale or lease or other disposal and not exclusively.

Article V.—Alexanderson Alternator

1. The Radio Corporation agrees to purchase from the General Company and the General Com- agrees to sell and to deliver f. o. b. [fol. 57] factory to it, as fast as they can reasonably be constructed and prior to January 1, 1922, twelve (12) Alexanderson, alternators complete with accessories in accordance with specifications attached hereto and marked "Exhibit B" at the special price of one hundred twenty-seven thousand dollars ($127,000) apiece. Spare alternators or other incomplete spare equipments may be substituted at prices to be agreed upon provided that the total purchases hereunder aggregate in price the price of twelve Alexanderson alternators with their accessories. In consideration for such agreement on the part of the General Company, the Radio Corporation agrees to issue and deliver to the General Company three hundred four thousand eight hundred ($304,800) shares of its preferred stock, but subject to the provisions of Article VI hereof.

Article VI.—Sale of Materials

1. The Radio Corporation proposes to purchase from the Marconi Wireless Telegraph Company of America, hereinafter referred to as the Marconi Company, all its property used or useful in connection with its manufacturing business, except the factory at Aldene, New Jersey. In case this purchase is made the Radio Corporation agrees forthwith to sell and does sell the property so purchased to the General Company, such sale to take effect immediately on the purchase of the same by the Radio Corporation, including all drawings, blueprints and material for manufacture and unfinished parts [fol. 58] on hand or on order as of the date of the Radio Corporation's acquisition of the same, and any factory plants, tools, machinery and dies which it may acquire from the Marconi Company, but not including the publishing plant of the Wireless Press, Inc., nor the building and real estate at Seattle, Washington, which latter will no longer be used for factory purposes. The accounts receivable are to be collected and the accounts payable are to be paid by the Radio Corporation.

2. The General Company agrees to pay for the property thus transferred by paying for the unfinished parts, work in progress and material on hand to be manufactured at actual cost of the same plus twenty per cent (20%), which amount is to be ascertained by two appraisers, one appointed by the General Company and one appointed by Mr. Edward J. Nally. In case they disagree the matter shall be referred to Mr. S. Roger Mitchell, or other public accountant satisfactory to both parties, whose decision shall be final.

3. In case the Radio Corporation shall acquire, prior to January 1, 1922, the factory plants, lands, etc., of the Marconi Company, at Aldene, New Jersey, as set forth in Exhibit C hereto attached, it agrees forthwith to sell the same to the General Company and the General Company agrees to buy the same for five hundred thousand dollars ($500,000).

4. The payments by the General Company to the Radio Corporation under this Article and deliveries of preferred stock to the Gen- [fol. 59] eral Company in payment for Alexanderson alternators and their accessories in accordance with Article V hereof, are to proceed as follows: At the time of taking over the unfinished parts, work in progress and material on hand a special account is to be set up between the General Company and the Radio Corporation, in which account is to be charged against the General Company the value of such unfinished parts, work in progress and material on hand, ascertained as above; if and when, prior to January 1, 1922, the Radio Corporation acquires the Aldene factory and transfers it to the General Compny, its price, five hundred thousand dollars ($500,000) is to be charged in the same account against the General Company. As and when the Alexanderson alternators and their accessories sold at the special price referred to above are shipped to the Radio Corporation, the price thereof is to be credited to the General Company on such account, until such credits aggregate one million five hundred twenty-four thousand dollars ($1,524,000). At any time when such account shows a balance in favor of the General Company the General Company may demand and shall then receive preferred stock of the Radio Corporation at par to any amount demanded not exceeding such credit balance, the par value of such stock to be charged to it in such special account; and if at any time the balance of said account is in favor of the Radio Corporation, the General Company shall liquidate such balance by surrender to the Radio Corporation of preferred stock of the Radio Corporation of a par value equal to the amount of such balance. Such special account shall be [fol. 60] entirely independent of all other accounts between the parties.

5. The Radio Corporation agrees to place forthwith with the General Company orders which will exhaust and consume said unfinished parts, work in progress and material; unfinished parts, work in progress and material not covered by such orders may be regarded by the appraisers as scrap in case the General Company shall find itself unable profitably to utilize the same.

6. The General Company agrees to fill the orders so to be placed on it and to bill the same to the Radio Corporation; in making up price of the articles so billed in accordance with Article IV hereof the price of the unfinished parts, work in progress and material taken over and inventories shall be taken as the price actually paid for the same by the General Company as above set forth, the additional work and material being charged on the basis of Article IV hereof.

Article VII.—Expert Advice and Technical Information

1. The General Company agrees that it will from time to time permit the Radio Corporation to have and will assist it in obtaining full information concerning inventions, patents and the patent situation of the General Company in the radio field. The Radio Corporation engages reciprocally to do the same for the General Company.

[fol. 61] 2. The General Company agrees upon request to furnish the Radio Corporation suitable plans for buildings, lay-out of machinery, antennae, etc., for use by the Radio Corporation hereunder, and if desired a man or men to supervise the construction and erection of such buildings, and the erection and installation of such machinery, etc., and also such engineers and experienced men as the General Company can reasonably spare and the Radio Corporation may reasonably require in the organization, management and development of the business of the Radio Corporation, and to give the Radio Corporation and those whom the Radio Corporation may designate from time to time all information in regard to technical and engineering but not manufacturing matters which it may possess from time to time and which the Radio Corporation may reasonably require for the conduct of its radio business hereunder, and further agrees to assist the Radio Corporation in every reasonable way to the end that the Radio Corporation shall have whenever needed, in its operations hereunder, the benefits of the widespread experience of the General Company. The Radio Corporation agrees to pay in each case the reasonable cost of furnishing such information and service, but not any part of the cost of acquiring the information except as the same may properly be charged as part of the development cost of apparatus which the General Company sells to the Radio Corporation.

3. Each party agrees to give the other at cost of supplying the same information and advice in connection with patent matters in its field.

[fol. 62] 4. The Radio Corporation agrees to give full information to the General Company on the same terms, and further agrees to afford the engineering representatives of the General Company the fullest possible facilities, consistent with the reasonable operation of the Radio Corporation, for the experimenting and for developing and testing new apparatus, devices and inventions.

Article VIII.—Term and Termination

1. This agreement shall continue until January 1, 1945, at which date it shall expire. As soon as is reasonably practicable after that licenses shall be granted as provided above under all patents to issue on patent applications which are then or may hereafter be filed in any country on inventions made or conceived by employees of either company up to the date of termination.

2. The radio Corporation shall after January 1, 1945, be licensed under all patents referred to in this agreement so far as the General Company now has or may hereafter acquire the right to grant such license to the extent necessary to enable it to manufacture for its own use hereunder, but not for lease, resale or other disposal, radio devices which it is unable to purchase of the General Company in accordance with the terms of Article IV hereof.

Article IX.—Further Assurances

1. The parties agree to execute such further instruments as may reasonably be necessary for carrying out the purposes hereof.

[fol. 63] Article X.—Controlled Companies

1. This agreement shall be binding upon and inure to the benefit of the parties hereto and their successors and their controlled companies, present and future. The British Thomson-Houston Company, Limited, and the Tokyo Electric Company, Limited, shall not for the purpose hereof be regarded as controlled companies of the General Company.

Article XI

1. Inasmuch as the General Company is not willing to turn over its patents, patent rights and licenses for any definite sum of money, but is willing to transfer such patents, patent rights and licenses only for a considerable interest in the profits to be derived from the use by the Radio Corporation of such patents, patent rights and licenses, it is therefore understood and agreed that in the event of the taking over of the Radio Corporation by any superior authority all right, title and interest of the Radio Corporation in any patent, patent right or license herein granted or agreed to be granted by the General Company to the Radio Corporation shall cease and shall be reassigned and shall revert to the General Company as of the date of such taking over except to the extent provided below. If instead of taking over the Radio Corporation the Government takes over its radio stations in any field and/or territory, except in and for time of war or public danger, the result shall follow so far as [fol. 64] concerns that field and/or territory. But this action shall in no way affect the rights of Marconi's Wireless Telegraph Company, Limited, or of Shielton, Limited, as set forth in the "Radio Corporation and British Marconi Company Principal Agreement"; such rights shall be reserved from any such reassignment by the Radio Corporation for the benefit of Marconi's Wireless Telegraph Company, Limited.

In testimony whereof the parties hereto have caused these presents to be executed and their corporate seals to be hereunto affixed by their proper officers thereunto duly authorized at New York City the day and year first above written.

General Electric Company, by E. W. Rice, Jr., President.

Attest: J. W. Elwood, Asst. Secretary. Radio Corporation of America, by Frederick C. Bates, President. Attest: Charles H. Wheeler, Secretary.

STATE OF NEW YORK,
County of New York, ss:

On this twentieth day of November, in the year one thousand nine hundred and nineteen, before me personally came Frederick C. Bates, to me known, who, being by me duly sworn, did depose and [fol. 65] says that he resides at Brooklyn, New York; that he is the President of the Radio Corporation of America, the corporation described in and which executed the above instrument, and also before me personally came Charles J. Wheeler, to me known, who being duly sworn did depose and say that he resides at Montclair, New Jersey; that he is the Secretary of the Radio Corporation of America, the corporation described in and which executed the above instrument; that he knows the seal of the said corporation; that the seal affixed to the said instrument is such corporate seal; that it was so affixed by order of the board of directors of the said corporation, and both the said Bates and the said Wheeler did depose and say that they had signed their names to the said instrument by order of the board of directors of the said corporation.

Gertrude Chandler, Notary Public, New York County, No. 386. New York County Register's No. 10324. Commission expires March 30, 1920.

STATE OF NEW YORK,
County of New York, ss:

On this twentieth day of November, in the year one thousand nine hundred and nineteen, before me personally came E. W. Rice, Jr., to me known, who, being by me duly sworn, did depose and say that he resides at Schenectady, New York; that he is the President of the General Electric Company, the corporation described in and which executed the above instrument, and also before me personally came J. W. Elwood, to me known, who, being by me [fol. 66] duly sworn, did depose and say that he resides at Van Hornesville, New York; that he is the Assistant Secretary of the General Electric Company, the corporation described in and which executed the above instrument; that he knows the seal of the said corporation; that the seal affixed to the said instrument is such corporate seal; that it was so affixed by order of the board of directors of the said corporation, and both the said Rice and said Elwood did depose and say that they had signed their names to the said instrument by order of the board of directors of the said corporation.

Gertrude Chandler, Notary Public, New York County, No. 386. New York County Register's No. 10324. Commission expires March 30, 1920.

EXHIBIT B

Item 1. High frequency motor generator set consisting of 1 600 H. P., 8-pole, quarter-phase, 2.200 volt, 900 r.p.m. induction motor

direct connected through a 3.1 gear to an alternator capable of generating directly frequencies up to 27,000 cycles.

Item 2. 1 High frequency transformer adapting the voltage of the alternator for the antenna.

Item 3. 1 Speed regulator for maintaining constant speed corresponding to wave lengths between 11,500 and 15,000 metres.

[fol. 67] Item 4. 1 Magnetic amplifier for controlling the output of the alternator.

Item 5. 1 Switchboard for controlling the operation of the driving motor and auxiliaries.

Item 6. 1 Operator's control board to control operation of the high frequency circuits.

Item 7. 1 Set of multiple tuning accessories for the antenna, equal in number to those now installed at New Brunswick, N. J.

Item 8. 1 3 Unit motor generator set consisting of a 440 volt, 3 phase induction motor direct connected to a 15 Kw. 125-250 volt D. C. generator.

Item 9. 2 Motor driven water pumps providing circulating water for alternator bearings and armature.

Item 10. Full set of instructions and drawings suitable for installation and operation purposes.

The Company proposes to furnish apparatus and devices for a complete, continuous-wave radio transmitting system for hand key operation, exclusive of building, foundations, towers for antenna, water and power supply.

The items enumerated above constitute the principal features of this system.

Multiple tuning of the antenna increases the efficiency of radiation. [fol. 68] The Company's guarantee as to operation is based on this fact and the use of the multiple tuned antenna. Item No. 7 covers apparatus that will be used to accomplish multiple tuning. The equipment may be used without multiple tuning, but when so used the efficiency of the system will be decreased.

The motor and gear are designed for a maximum speed corresponding to a waive length of 11,500 metres and variable speed control is provided for operation at longer waves. The system to be furnished is designed to operate at wave lengths between 11,500 metres and 15,000 metres and is guaranteed, when used with multiple tuned antenna, to produce a charging current of 400 amperes at 12,000 metres in an antenna of the New Brunswick, New Jersey, type. The antenna charging current is to be measured when the key is pressed and the equipment shall be capable of operating continuously for a period of twenty-four consecutive hours with telegraph control.

Exhibit C

The land and real estate owned by the Marconi Company at Aldene in the State of New Jersey together with the factory buildings, wireless towers and structures located on such land, the said

land being located between the fork of the Lehigh Valley Railroad and the Central Railroad of New Jersey on the east and bounded on the north by Westfield Avenue, together with the tools and machines in all such structures.

[fol. 69] AGREEMENT REFERRED TO IN PARAGRAPH 5 OF PLAINTIFF'S BILL OF PARTICULARS

Agreement made this first day of July, 1920, between the General Electric Company, a New York corporation (herein called the General Company), and the American Telephone & Telegraph Company, a New York corporation, herein caled the Telephone Company.

Whereas, the General Company is engaged in the manufacture and sale in the United States of apparatus and systems for the generation, distribution and utilization of electricity for light, heat, power, traction and associated purposes, and in the manufacture and sale of a general line of electrical and power apparatus, machines and appliances, and, directly and through affiliated companies, is engaged in the purchase of apparatus and devices of various kinds from others and in the sale thereof; and is also engaged in the manufacture and sale of wireless apparatus and appliances; and

Whereas, the Telephone Company and its Associated Companies are engaged in the operation of telephone and telegraph systems; and

Whereas, each party is in possession of information, patents and inventions applicable to, and has research organizations engaged in investigations bearing upon, not only its own business but also the business of the other party; and

Whereas, various patents or applications for patents of the parties [fol. 70] are involved in interference with each other in the United States Patent Office; and

Whereas, the restrictions upon each party imposed by the patent rights of the other and the uncertainties arising out of interferences have tended to, and if permitted to continue will, hamper and delay progress in the development and production of wire and wireless telephone and telegraph apparatus and systems; and

Whereas, the effective and prompt development of the arts in question can be secured only by the free and frank co-operation and exchange of information between the parties, which cannot well take place if improvements and knowledge resulting from one party's co-operation with the other party may without its consent be made available in its field to the use of others;

Now in consideration of the premises and the mutual agreements herein contained, it is agreed as follow:

ARTICLE I.—Definitions

For the purpose of this agreement the following terms are defined as follows:

"Wire telephony" is the art of communicating or reproducing sound waves (created, directly or indirectly, by the voice or by muscial instruments) by means of electricity, magnetism or electro-magnetic waves, variations or impulses conveyed or guided by wires, [fol. 71] and includes all generating, measuring, switching, signalling, and other means or methods incidental to or involved in such communication.

"Wireless telephony" is to be taken as meaning the same as the above, except that the waves, variations or impulses are radiated through space.

"Wire telegraphy" is the art of communicating messages by code signals (such as the Morse Code, for example) by means of electricity, magnetism or electro-magnetic waves, variations or impulses conveyed or guided by wires, and includes all generating, measuring, switching, signalling and other means or methods incidental to or involved in such communication, but does not include such devices as annunciators, elevator signals, engine room telegraphs, etc.

"Wireless telegraphy" is to be taken as meaning the same as "wire telegraphy," except that the waves, variations or impulses are radiated through space.

"Power purposes" are defined as including all prime movers and their accessories and all generation, use measurement, control and application of electricity for light, heat and power, but does not include any communication purposes.

"Household devices" are electric or electrically operated devices designed primarily for domestic use, but do not include devices for communication purposes.

"Trans-oceanic" communication shall be understood to include all communication between two continents, or between a continent and [fol. 72] an island more than one hundred miles from its shores; islands within one hundred miles of the shores of a continent being considered parts thereof. North America, including the Panama Canal Zone and all of Central America north thereof, is to be considered as one continent, and South America and all Central America south of the Panama Canal Zone as another. This definition does not include communication between ships, or between ships and shore.

'The United States Government" shall be understood to include not only the Federal Government but also the Governments of the Philippines, Porto Rico and other federal possessions, present or future; but shall not include any municipal, county or state government.

"Train dispatching" is telegraphic or telephonic conveyance of train orders or operating information between the office of a train dispatcher or similar official and way stations, or other points along the line of way, or railway vehicles (with or without incidental provision for operating at will in an emergency, and not automatically, signals, brakes, stops and switches) for controlling the movements of trains or other automotive vehicles.

"Railway signalling" is the operation of signals, switches, brakes, stops, etc., controlling the movements of trains or other automotive

vehicles, controlled by or in accordance with train or vehicle movements or track conditions, including block signalling, cab signals [fol. 73] and train stops. It does not include train dispatching as above defined.

Any question arising as to the meaning or application of the foregoing definitions shall be settled by arbitration, as hereinafter provided.

Article II.—The Patents Included in This Agreement

The licenses provided for herein are granted and agreed to be granted under all patents, and rights to or under patents, of the United States now or hereafter during the term of this agreement owned or controlled by the parties hereto, and under all such patents hereafter issued upon inventions now or hereafter during said term so owned or controlled, and to the extent to which the parties have or may have the right to grant licenses, excepting as otherwise specified in connection with the several grants hereinafter contained, and excepting such patents and inventions as may be excluded from the operation of this agreement in the following manner:

A list of all United States patents under which it now holds transferable rights shall be furnished by each party to the other within sixty days from the date of this agreement. Such lists shall separately identify those patents, and shall also include those applications, as to which rights, if granted hereunder, would be restricted in scope or would involve continuing obligations not implied by law. Copies of all contracts creating such restrictions or obligations shall, upon request, be furnished by each party to the other. Thereupon, [fol. 74] and within six months after the receipt of the list to be furnished as aforesaid, each party may in writing advise the other as to the patents and applications described in such list, furnished by the other, which (or the patents to issue on which) it desires to exclude from this agreement; and no licenses are granted by this agreement under any patents so excluded. Each party shall thereafter, at such periods as may be agreed upon, or whenever requested by the other party, furnish to such other party like lists of subsequent patents and applications upon request therefor like copies of contracts; and each party may, within six months after the receipt of any such list, advise the other in writing as to the patents and applications described in such list which (or the patents to issue on which) it desires to exclude from this agreement; and no licenses are granted by this agreement under any patents so excluded.

Article III.—Scope of Licenses

All of the licenses herein granted are, unless otherwise expressed in connection with the several grants, licenses to use methods and processes, and to make, use, lease, sell or otherwise dispose of apparatus, machines, devices, appliances and systems embodying the inventions of the several patents, in the field in which the licenses are granted.

But no rights are granted to either party to manufacture, or to have manufactured, under patents under which it receives licenses [fol. 75] herunder, apparatus of the character at the time manufactured by the other party, except in factories owned or operated by one or the other of the parties hereto, or by their controlled companies, without the written consent of the party granting such licenses.

Article IV.—Reservations and Exception to which the Licenses are Subject

1. Each party reserves a non-exclusive right, under its own patents, to manufacture for and sell to the United States Government wireless devices, apparatus and systems, and to grant to that Government non-exclusive licenses to make or have made for it any wireless devices, apparatus and systems; but such devices, apparatus and systems are licensed to be sold to the Government only for Governmental and not for commercial uses or for toll, and not for resale, and the non-exclusive licenses which may be granted to the Government shall similarly be limited.

2. Each party reserves, under its own patents, rights in the fields and for the uses with reference to which it receives licenses under patents of the other party.

3. No licenses are granted by either party with reference to the manufacture and sale of wire or cable for the transmission of electric power or telephone or telegraph currents.

4. No licenses are granted to the Telephone Company for electric lamps or other lighting devices (except non-exclusive licenses with reference to telephone and telegraph switch board signal lamps and [fol. 76] ballast lamps), nor for the working of tungsten. But the Telephone Company is licensed to use, in the fields for which it receives licenses hereunder, tungsten purchased from the General Company, or from others having the right to make and sell tungsten, and to make, use, sell or lease (for such fields only) devices embodying such tungsten. The General Company agrees to sell and deliver such tungsten for such purposes, in wire or other practicable form to be specified by the purchaser from time to time, on the terms specified in Article X hereof.

The Telephone Company agrees that, on all sales of telephone and telegraph switchboard lamps or ballast lamps, hereunder, to others than the Associated Companies of the Bell System, it will pay to the General Company a royalty of 2% on the net sales price thereof.

5. The licenses hereinafter granted to the Telephone Company, in so far as they cover rights to sell or lease "carrier current," wireless or vacuum tube devices for use on electric railroads, are limited to the sales or leases of said devices to the railroads; all sales of such devices to be installed on electric cars or electric locomotives, as a

part of the original construction and equipment thereof, shall be through the General Company only.

Article V.—Licenses Granted

Subject to the foregoing reservations, each party grants and agrees to grant to the other the following licenses in the following fields of use:

[fol. 77] 1. Government Uses.—Each party grants to the other non-exclusive licenses, to which all exclusive licenses herein granted are subject, to make any and all wireless apparatus and systems for and to sell the same to the United States Government, but only for governmental and not for commercial or toll uses and not for resale.

2. Wireless Telegraphy.—(a) The General Company grants to the Telephone Company non-exclusive licenses in the field of wireless telegraphy for its own communication or for purposes of convenience or to save expense in connection with its commercial operation of wire telegraph and wire and wireless telephone systems, but not for profit or for transmission of messages for the public.

(b) Subject to the foregoing, the Telephone Company grants to the General Company exclusive licenses in the field of wireless telegraphy.

3. Wire Telegraph.—(a) The Telephone Company grants to the General Company non-exclusive licenses to make for its own operation and to operate wire telegraph systems, other than trans-oceanic; but no licenses are granted with reference to operation on lines leased to others than parties hereto or their subsidiary companies to which rights hereunder may be extended in accordance with subdivision (b) of Section 3 of Article VI; and no licenses are granted with reference to trans-oceanic wire telegraphy.
[fol. 78] (b) Subject to the foregoing, the General Company grants to the Telephone Company exclusive licenses in the field of wire telegraphy on land, and over ocean cables not more than one hundred miles in length, and between the main body of the United States and Cuba; but no licenses are granted with reference to other trans-oceanic wire telegraphy.

4. Wireless telephony.—(a) The Telephone Company grants to the General Company non-exclusive licenses in the field of wireless telephony for its own communication or for purposes of convenience, or to save expense in connection with its commercial operation of wireless telegraph systems, but not for profit or for transmission of messages for the public.

(b) The Telephone Company grants to the General Company licenses (exclusive, except that the Telephone Company reserves exclusive rights for the uses and to the extent specified in subdivision (c) of this Section (4) in the field of trans-oceanic wireless telephony, such licenses being limited, so far as concerns service on this

continent for the public or for others than the General Company, to rendering such service through only the Telephone Company's wire or wireless telephone systems, such limitation to exist so long as the Telephone Company remains in a position to and does supply that service. The General Company is, however, licensed to bring trans-oceanic wireless telephone messages by wire telephony to, and transmit them from, a central or transfer point at a distance from its wireless stations (one such point for each pair of trans-oceanic sta- [fol. 79] tions) and the Telephone Company agrees that at such point it will establish communication with its system, but the Telephone Company shall not be required to accept any such point more than five miles from the nearest telephone central exchange of the Bell system. All service for the public shall be through the Telephone Company's system, and shall be advertised as service of the Telephone Company through stations of the General Company when and so long as the General Company maintain facilities for the trans-oceanic wireless telephone service.

Joint through rates and the division rates shall be agreed upon, it being agreed in principal that the General Company is entitled to its reasonable tolls between the central or transfer point and the distant country (including the amount, if any, paid to the foreign company with which communication is had) and that the telephone Company is entitled to its reasonable tolls between the central or transfer point and the destination or sending point in the United States.

(c) The General Company grants to the Telephone Company licenses (exclusive, except that the General Company reserved exclusive rights for the uses and to the extent specified in foregoing subdivision (b) in the field of trans-oceanic wireless telephony, such licenses being limited, so far as concerns service for the public or for others than the telephone Company, to rendering such service through only the General Company's systems for trans-oceanic communication. But if and so long as the General Company is not [fol. 80] prepared to and does not remain in a position to and does not supply such service, the Telephone Company may establish wireless stations for rendering such service, after giving the General Company reasonable notice and opportunity to do so, and shall have the right to continue to render such service through all such stations established by it except in so far as the General Company shall elect to cooperate in rendering such service, or any portion thereof, in which event the General Company shall take over those stations, or such of them as it may elect, at the then cost of reproduction less depreciation. While the trans-oceanic service is being rendered through the General Company's stations, the advertising and the division of rates shall be as provided in foregoing subdivision (b) of this Section 4.

(d) The Telephone Company grants to the General Company.

(1) Exclusive licenses to make, use, lease and sell wireless telephone apparatus and systems for communication by and between

airplanes, airships, ships and other automotive devices, except railway vehicles. The General Company is granted non-exclusive licenses to establish transmitting and receiving stations for communication with the foregoing, but is given no right to connect with any public service telephone system. The Telephone Company is licensed, but is under no obligation, to establish or maintain means by which such wireless telephone communication may be had with and through the Telephone Company's telephone system, and the Telephone Company is under no obligation to permit [fol. 81] such communication. If, however, the Telephone Company shall establish, maintain or permit such wireless telephone communication through stations of third parties, other than the United States Government, it shall do the same with respect to the General Company's stations on at least as favorable terms, including distribution of tolls, and engineering requirements. In case, at any time, the General Company has established such a station as is referred to in this paragraph, and the Telephone Company shall elect to co-operate or render such wireless service in any substantial part of the same territory, it shall purchase the said station of the General Company at the then cost of reproduction less depreciation.

(2) Non-exclusive licenses to establish and maintain transmitting stations for transmitting or broadcasting news, music and entertainment from a transmitting station to outlying points, and licenses to make, use, sell and lease wireless telephone receiving apparatus for the reception of such news, music and entertainment so broadcasted. For the protection of the General Company under the license which it receives in this paragraph, it is agreed that the Telephone Company has no license under this agreement to make, lease or sell wireless telephone receiving apparatus except as part of or for direct use in connection with transmitting apparatus made by it; and for the protection of the Telephone Company under the licenses hereinbelow granted to it, it is agreed that the General Company has no license to equip wireless telephone receiving apparatus sold under [fol. 82] this paragraph with transmitting apparatus, or to sell, lease or otherwise dispose of transmitting apparatus for use in connection with receiving apparatus sold under this paragraph.

(3) Exclusive licenses to make, use, lease and sell all wireless telephone apparatus for amateur purposes.

(4) Exclusive license to make, use, lease and sell all wireless telephone apparatus (but not for public service) where the business use thereof is incidental (as for example for farmers), or where at least one of the stations is portable and is intended to be moved from place to place (as for example in lumbering operations) or where such wireless apparatus brings communication to new points not at the time served by the Telephone Company.

(5) Reserving to itself an exclusive license to make, use, sell and lease all wireless telephone apparatus to electric light, electric power and electric traction companies for connection with wire or wire-

less public service telephone communication systems and receiving from the General Company a similar exclusive license of the same scope under the General Company's patents, the Telephone Company grants the General Company exclusive licenses to make, use, sell and lease all wireless telephone apparatus for electric light, electric power and electric traction companies but only for the use of such companies and not for the use of the public, nor for toll, nor for the operation of a selective train dispatching system and not for connection with any public service telephone system.

[fol. 83] (e) The General Company grants to the Telephone Company,

(1) subject only to subdivisions (a), (b) and (c) and paragraph (1) of subdivicion (d) of this Section, exclusive licenses in the field of wireless telephony to make, use, lease and sell all wireless telephone apparatus connected to or operated as a part of a public service telephone communication system, whether wire or wireless.

(2) subject to all the foregoing exclusive licenses in the field of wireless telephony to make, use and sell for all business, public service and commercial uses of such character as might be served by leased wires, as for example brokers' offices, business houses, manufacturing plants, gas and water companies, mining companies, etc.

(f) It is further agreed that in the fields of the exclusive licenses granted by paragraphs (3), (4) and (5) of Section (d) above and in Paragraph (2) of Section (e) above, and for any wireless telephone uses not specified herein, each party will on application of the other party grant a license to the other party on reasonable terms for each specific installation for which such other party desires to manufacture and dispose of such wireless telephone apparatus; the license fee to be fixed with due regard to the benefits derived by the licensee and the disadvantages suffered by the licensor in the granting of such license.

5. Wire Telephony.—(a) The Telephone Company grants to the General Company licenses (exclusive, except that the Telephone [fol. 84] Company reserves non-exclusive rights) to make and sell (but not to lease) to electric light, electric power and electric traction companies apparatus for so-called "carrier current" telephone communication over wires, or partly over wires and partly across wireless gaps, but in each instance only for the use of such companies and not for the use of the public, nor for toll, nor for operation of a selective train dispatching system, and not for connection with any public service telephone system.

(b) Subject to the foregoing, the General Company grants to the Telephone Company exclusive licenses in the field of wire telephony on land, and over cables not more than one hundred miles in length, and between the main body of the United States and Cuba; licenses are granted by each party to the other with reference to other transoceanic wire telephony, such licenses being of the character and

subject to the limitations and provisions expressed in foregoing subdivisions (b) and (c) of Section 4, with reference to trans-oceanic wireless telephony.

6. Power Purposes and Household Devices.—The Telephone Company grants to the General Company exclusive licenses in the fields of power purposes, household devices, and distant actuation and control by wireless for other than communication purposes. This grant is made with a reservation in so far as concerns patents for inventions relating to business of the general character which any controlled Company of the Telephone Company now conducts as jobber, and any extensions of that business along similar lines. With refer- [fol. 85] ence to such patents (except those covering articles of the General character which such Company now purchases from the General Company, or its affiliated companies, or sells as agent for the same), the Telephone Company reserves under its own patents (but is granted no license under the patents of the General Company) the non-exclusive right for such controlled companies to make apparatus and devices embodying the inventions of said patents, or have them made for them, and to sell them in the said jobbing business.

7. Railroad Signalling, X-Ray Devices, Radio Goniometry.—The Telephone Company grants to the General Company exclusive licenses in the fields of railroad signalling (other than train dispatching), X-Ray devices and appliances associated therewith, and radio goniometry.

8. Train Dispatching.—Subject to the foregoing, the General Company grants to the Telephone Company exclusive licenses in the field of train dispatching.

9. Submarine Signalling, Scientific and Therapeutic Apparatus, Shop Expedients, and other Applications.—Each party grants to the other, non-exclusive licenses in the following fields:

Submarine signalling.

Scientific apparatus for use of laboratories, colleges and scientific societies, as distinguished from commercial use.

[fol. 86] Wireless apparatus for use of professional investigators (as distinguished from amateurs) for experimental purposes only.

Therapeutic apparatus other than X-Ray devices and appliances.

Shop tools, appliances and processes, but only for the production of apparatus and devices embodying inventions which the grantee is licensed to make and use hereunder.

All applications, not herein otherwise specified, of inventions pertaining or applicable to or to the use of vacuum tubes, and to generating (directly or from other currents), modifying, amplifying, transmitting or receiving electro-magnetic waves, variations or impulses for other than power purposes, including instruments and their records for producing music and other sounds for amusement or artistic purposes, with the right to transmit the sound by wire telephony throughout a building.

Article VI.—Provisions with Reference to Foregoing Licenses

1. Whenever licenses granted under the terms of this agreement are based upon rights requiring the payment of royalties or other deferred payments, measured by the use made of the invention, the party accepting such licenses shall make payments measured by its use of the invention at the same rate and upon the same terms as those agreed to be made by the party originally acquiring the rights.

2. The foregoing licenses shall continue respectively for the terms [fol. 87] of the several patents issued or to be issued under which they are granted and agreed to be granted and shall not be limited by the term of this agreement.

3. (a) The Telephone Company may grant sub-licenses under its standard form of license contract (a copy of which is now delivered to the General Company) to such operating companies, as are now or may from time to time be operating under such form of contract. The provisions of this sub-division (a) shall apply to any changed form of license contract provided that, as changed, it grants rights in the fields of the General Company no broader than those granted by the present form.

(b) Subject to the foregoing subdivision (a), each party hereto may assign or grant sub-licenses under any of the rights granted hereunder, provided that in each instance the assent of the other party is first obtained.

(c) No disposition by either party of rights hereunder acquired by it, shall relieve such party of any of its obligations under this agreement, or restrict the rights of the parties hereto in operating under or modifying this agreement.

4. Each party agrees that, so far as it is enabled so to do, it will, in disposing of devices embodying inventions pertaining or applicable to vacuum tubes, or to generating, modifying, amplifying, transmitting or receiving electro-magnetic waves, or other devices or material the unrestricted sale of which would deprive the other party of rights to which it is entitled hereunder, use such precautions, by [fol. 88] contracts, restricted licenses or otherwise as may be necessary or advisable in order to prevent its customers or others from acquiring (by acquisition of devices from it or otherwise) licenses to use the same which the party disposing thereof has no right to grant.

5. The admission of validity implied in the acceptance of licenses hereunder is limited to the field for which such licenses exist.

6. One or the other of the parties hereto having already parted with rights under its inventions, present and future, in most of the Foreign countries, it is agreed that the parties will co-operate with each other and with their foreign affiliated companies who may desire licenses under the inventions of the other party to the end that exchanges of licenses may be effected in such countries. No licenses under foreign patents are now granted or are to be implied; but the licenses herein

granted under United States patents include the right to manufacture and sell for uses abroad. Each party agrees not to export to any country in which the other party has an affiliated company, apparatus purchased from such other party which such other party could not itself so export, in view of existing contract obligations, after notice of such obligations and without first securing a written waiver thereof.

7. Each party represents that in its best judgment it has no outstanding obligations which would prevent it from entering into the agreements and from granting the licenses herein expressed. If, however, it is found that there are such conflicting obligations, the [fol. 89] present agreement is made subject to the right to fulfill those obligations.

Article VII.—Interferences

The parties agree to use reasonable endeavors to settle, without litigation, interferences now pending or which may arise involving inventions within the scope of this agreement.

Article VIII.—Acquisition of Patent Rights

Neither party shall acquire from others rights to or under United States patents or inventions, or rights to use secret processes, applicable to the fields of the other party, of such limited character that the other party does not, by the operation of this agreement receive licenses thereunder of the scope and within the respective fields herein set forth, unless the party proposing to acquire such rights shall first have given the other party an opportunity to be represented in the negotiations and thereby to acquire rights for its field.

Article IX.—Co-operation and Exchange of Information

1. Each party agrees that it will, from time to time during the term of this agreement, freely permit the other to have all information in its possession which it may have a right to disclose with [fol. 90] reference to devices, apparatus, systems or methods applicable to the uses of the other party as herein defined, it being agreed that any secret process so disclosed shall be maintained in secrecy by the party to whom it is disclosed. Blue prints, etc., shall be furnished at the cost of preparing the same. Each party shall at all reasonable times have access (through a reasonably limited number of accredited representatives who are regular employees under obligation to assign inventions to their employer), to the laboratories, factories and wireless stations of the other, to the end that development work may be expedited and rendered the more effective.

Each party shall, with reference to inventions owned or controlled by it and under which the other party is entitled to rights hereunder, endeavor to obtain or permit and aid the other to obtain proper patents thereon.

2. Publicity with reference to trans-oceanic telephony shall be joint, and shall recognize that the parties hereto, or their associates, have contributed equally to such work.

Engineering representatives shall be assigned by each of the parties to co-operate in the carrying out of the further work necessary for the development of trans-oceanic wireless telephony. In case trans-oceanic telephone service is given from the plant of the Telephone Company through the stations of the General Company, these engineering representatives shall co-operate in the design of the apparatus and systems for this service, it being recognized that such systems and apparatus must be so designed as properly to fit in with the [fol. 91] systems of the General and Telephone Companies respectively.

Each party shall afford the engineering representatives of the other the fullest possible facilities, consistent with the reasonable operation of the other, for experimenting and for developing and testing apparatus and systems for use in trans-oceanic telephony, and each shall at all times be given such an opportunity to make such tests, experiments and observations in the trans-oceanic stations of the other as do not conflict with the service then being rendered by such stations, and each party shall afford to the other such facilities for test, experimentation and observation on ships as it may be able to extend.

3. In the operation of wireless and "carrier-current" communication, the parties, shall co-operate to the end that interference with the operations of either party, due to the operations of the other, shall be minimized, it being recognized that the available wave lengths are limited.

Article X.—Purchases as Between Parties

It is recognized that each party has and will normally continue to have facilities for manufacturing certain apparatus or parts thereof which may be required by the other party under its licenses hereunder, and that a duplication of such facilities may be wasteful and uneconomical. Each party agrees that it will upon request manufacture for and sell and deliver to the other, with reasonable business [fol. 92] promptness, on receipt of orders from time to time and at favorable prices not to exceed those charged to others (except controlled companies) purchasing in like quantities for use in the United States, such apparatus and parts as the former is engaged in manufacturing from time to time and as the latter may desire for use under the licenses granted by this agreement.

Article XI.—Litigation

Each party shall have the exclusive right to bring suits for the infringement in the fields in which its licenses are herein expressed as exclusive (and the General Company may bring such suits for infringement in the field of trans-oceanic wire and wireless telephony)

joining in any such suit the patent owner or the party which has acquired from the patent owner the right to sue thereunder.

Neither party shall bring suit for infringement of patents against the other party, or against the distributors and jobbing houses owned by or affiliated with either party, because of sales by such party, or by its (or its controlled companies) distributors or jobbing houses, or devices made in the United States of America, by others than the parties hereto, it being agreed that the remedy in case of any such infringement shall be only by suit against the manufacturer of these devices.

[fol. 93] Article XII.—Releases

Each party reserves to itself the right to deal with the United States Government with reference to settlement for past use of its inventions in telephone and telegraph systems and apparatus.

Subject to the foregoing, each party releases the other and the vendees and users of apparatus or systems made by it, from all claims growing out of past infringement of patents, by reason of the manufacture, use and sale of such apparatus and systems by the other party, and its resale or use by such vendees and users.

Article XIII.—Arbitration

In case any differences under this agreement (except in respect of interferences or priority of rights to inventions or patents) shall arise which the parties are unable to adjust between themselves, either party may, by notice in writing served on the other, designate one arbitrator and call upon the other to designate a second arbitrator within thirty days after the receipt of such notice; and the party receiving such notice agrees so to designate an arbitrator. The two arbitrators so designated shall promptly select a third arbitrator. The matter in dispute shall be submitted to the three arbitrators so selected and the parties agree that the concurring decision of any two of the above mentioned three arbitrators shall be final [fol. 94] and binding upon them. Each party shall pay its own expenses, including the fees of its arbitrator, and the fees and expenses of the third arbitrator shall be paid one-half by each party.

Article XIV.—Termination of Agreement

(a) This agreement may, at any time, be terminated by mutual consent of the parties, in which event all licenses granted herein up to the date of such termination shall become non-exclusive and shall continue to the ends of the terms of the patents.

(b) Unless previously terminated as above provided, the duration of this agreement shall be ten years from the date hereof, but shall automatically continue in force thereafter until cancelled on three years' written notice given after the expiration of said ten years' period, by one party to the other party.

(c) Upon any termination of this agreement (except under the provisions of Subdivision (a) of this Article XIV) all licenses, expressed herein as exclusive shall remain exclusive during the life of the several patents.

Article XV.—Further Assurances

The parties agree to execute and deliver such further instruments as may reasonably be necessary for carrying out the provisions and purposes of this agreement.

[fol. 95] ARTICLE XVI.—Successors

This agreement is binding upon and shall inure to the benefit of each of the parties hereto and their several successors in business, except that either party may transfer or dispose of any part or parts of its business not involving the grant of any licenses under this agreement, and in such cases this agreement shall be binding upon or inure to the benefit of the successor to that part of the business so transferred.

In witness whereof, the parties hereto have caused this instrument to be executed on the day and year first above written, by their proper officers thereunto duly authorized.

General Electric Company, by E. W. Rice, Jr., President. Attest: J. W. Elwood, Assistant Secretary. (Seal.) American Telephone & Telegraph Company, by H. B. Thayer, President. Attest: A. A. Marsters, Secretary. (Seal.)

[fol. 96] AGREEMENT REFERRED TO IN PARAGRAPH 6 OF PLAINTIFF'S BILL OF PARTICULARS

Whereas, a license agreement was entered into between the General Electric Company, a New York corporation herein called the General Company, and the American Telephone & Telegraph Company, a New York corporation herein called the Telephone Company, dated July 1, 1920, and

Whereas, the General Company desires to extend rights thereunder to the Radio Corporation of America, a Delaware Corporation (herein called the Radio Company) pursuant to the provisions of an agreement of November 20, 1919, between the General and Radio Companies; and

Whereas, the Telephone Company desires to extend rights thereunder to the Western Electric Company, Incorporated, a New York Corporation (herein called the Western Company) pursuant to the provision of an agreement of February 6, 1882 as modified by agreement of April 8, 1908, between the Telephone and Western Companies; and

Whereas, the Radio and Western Companies, respectively, desire to obtain such rights, but in accordance with Subdivision (b) of

Section 3, Article VI of said agreement of July 1, 1920, such rights may be extended only with the assent of both parties to said agreement.

Now, it is agreed as follows:

1. The General Company may extend to the Radio Company, and the Telephone Company may extend to the Western Company (pursuant to the above mentioned agreements of November 20, 1919, February 6, 1882, April 8, 1908, or otherwise), any of the said rights [fol. 97] reserved and acquired by each, respectively, under this present agreement and under said agreement of July 1, 1920, whether or not expressed in said agreement of July 1, 1920, as personal or non-exclusive or non-assignable, except any right to terminate under the provisions of Article XIV of said agreement.

2. The Western Company hereby grants and agrees to grant to the General Company under the present and future patents of the Western Company, rights of the same character and scope, and for the same fields and subject to the same limitations and conditions, as the rights granted to the General Company in and by said agreement of July 1, 1920; provided, however, that all rights herein granted and agreed to be granted are subject to rights, which the Western Company hereby reserves for itself and for the Telephone Company and their several successors in business, of the same character and scope and for the same fields and subject to the same limitations and conditions as the rights reserved by the Telephone Company in and by said agreement of July 1, 1920. And the Western Company hereby assumes towards the General Company (and the Telephone and Western Companies assume towards the Radio Company, to the extent that the General Company, under the provisions of Clause 1 hereof, extends or may hereafter extend its rights to the Radio Company) obligations similar to the obligations assumed by the Telephone Company towards the General Company in and by said agreement of July 1, 1920, except that the Western Company assumes no obligations as to operation of telephone or telegraph systems unless [fol. 98] and until it shall engage in the commercial operation of such systems.

3. The Radio Company hereby grants and agrees to grant to the Telephone Company, under the present and future patents of the Radio Company, rights of the same character and scope, and for the same fields and subject to the same limitations and conditions, as the rights granted to the Telephone Company in and by said agreement of July 1, 1920; provided, however, that all rights herein granted and agreed to be granted are subject to rights, which the Radio Company hereby reserves for itself and for the General Company and their several successors in business, of the same character and scope for the same fields and subject to the same limitations and conditions as the rights reserved by the General Company in and by said agreement of July 1, 1920. And the Radio Company hereby assumes towards the Telephone Company (and the General and Radio Companies assume towards the Western Company, to the

extent that the Telephone Company, under the provisions of Clause 1 hereof, extends or may hereafter extend its rights to the Western Company) obligations similar to the obligations assumed by the General Company towards the Telephone Company, in and by said agreement of July 1, 1920, except that the Radio Company assumes no obligations as to manufacturing or selling articles or devices which it is not from time to time engaged in commercially manufacturing.

4. This agreement shall terminate at the same time the said agreement of July 1, 1920, terminates.

[fol. 99] In witness whereof, the parties hereto have caused this instrument to be executed, in quadruplicate, on the first day of July, 1920, by their proper officers thereunto duly authorized.

General Electric Company, by E. W. Rice, Jr., President. Attest: J. W. Elwood, Asst. Secretary. (Seal.) Radio Corporation of America, by E. J. Nally, President. Attest: C. J. Ross, Secretary. (Seal.) American Telephone & Telegraph Company, by H. B. Thayer, President. Attest: A. A. Marsters, Secretary. (Seal.) Western Electric Company, Inc., by H. A. Halligan, Vice-President. Attest: George C. Pratt, Secretary. (Seal.)

[fol. 100] IN UNITED STATES DISTRICT COURT

[Title omitted]

NOTICE OF MOTION

GENTLEMEN: Please take notice that on the call of the Motion Calendar to be held at the Post Office Building, City of New York, New York, on Tuesday October 1st, at ten o'clock A. M. of that day, or soon thereafter as counsel can be heard, we shall present to the Court a Motion for an Order dismissing the bill of complaint herein as more fully pointed out in the accompanying Motion, copies of the motion papers being attached hereto.

Yours, etc., Pennie, Davis, Marvin and Edmonds.

Office and Post Office Address, 165 Broadway, Borough of Manhattan, City of New York.

Dated September 20, 1923.

To Sheffield and Betts, Solicitors for Plaintiff Radio Corporation of America, 27 Cedar Street, New York City.

[fol. 101] IN UNITED STATES DISTRICT COURT

[Title omitted]

MOTION TO DISMISS

Now comes the defendant, Independent Wireless Telegraph Company, by its solicitors Pennie, Davis, Marvin and Edmonds, and upon the bill of complaint herein, the bill of particulars furnished by the plaintiff and upon certain license agreements between the plaintiff and the defendant American Telephone and Telegraph Company as identified in the bill of complaint and disclosed by the bill of particulars, moves this honorable court for an order dismissing the bill of complaint herein, all upon the following grounds:

That the De Forest Radio Telephone and Telegraph Company, the owner of the patent in suit, has not joined in this litigation as a party plaintiff by duly signing and verifying the bill of complaint herein, and the plaintiff Radio Corporation of America is not such a licensee under the patents as to permit it to sue alone in its own name, in the name of the owner of the patents in suit, or to sue in [fol. 102] the name of the owner of the patents joining itself as a licensee under the patents.

Pennie, Davis, Marvin and Edmonds, Solicitors for Defendants Independent Wireless Telegraph Co. William H. Davis, Willis H. Taylor, Jr., of Counsel.

IN UNITED STATES DISTRICT COURT

[Title omitted]

OPINION—October 13, 1923

Motion to dismiss as bill in equity for the infringement of two patents. The motion is based upon a defect of parties, the defendant, Independent Wireless Telegraph Company, contending that the patent owner is not before the Court. The motion is made upon the bill, the bill of particulars, and the contract of which the bill makes profert.

W. H. Taylor, Jr., for the motion.
L. F. H. Betts opposed.

LEARNED HAND, D .J.:

[fol. 103] The bill alleges that the inventions in suit were made by De Forest and assigned by him to the plaintiff the De Forest Company. On March 10, 1917, the De Forest Company granted an exclusive license to the Western Electric Company which granted the right "to make use * * * and sell" the inventions in suit for

the term of their existence subject to a license theretofore given to the defendant, American Telephone & Telegraph Company. This contract reserved, however, to the De Forest Company certain non-exclusive, non-transferable and personal licenses, to make and sell the patented apparatus for specified purposes not necessary to enumerate. The Western Electrict Company later assigned all its rights in the contract to the Defendant, American Telephone & Telegraph Company, in whom thereupon there vested all the interest in the patents in suit except those reserved to the De Forest Company as above stated.

On November 20, 1919, the General Electric Company made a contract with the plaintiff, Radio Corporation, by which it granted to it an exclusive license to use and sell for "radio purposes" all inventions then owned by it or thereafter acquired. "Radio purposes" was defined "as the transmission or reception of communication * * * by what are shown as electro magnetic waves, but not wire." At this time the General Electric Company did not have any interest in the patents in suit, but on July 1, 1920, the defendant American Telephone & Telegraph Company and the General Electric Company entered into a contract by which they exchanged [fol. 104] rights in various patents or applications owned or controlled by each. This contract is very long and complicated. Among the rights conferred upon the General Electric Company were (1.) a non-exclusive license to make wireless apparatus for the United States, (2.) an exclusive license "in the field of wireless telegraphy," (3.) an exclusive license to make, use and sell wireless telephone apparatus for communication between automotive vehicles except railways, (4.) an exclusive license to make, use and sell such apparatus for amateur purposes or where "the business use is incidental" or where one of the stations is portable, (5.) an exclusive license to make, sell and use wireless telephone apparatus for electric light power and traction companies, (6.) an exclusive license to make, use and sell wireless telephone apparatus as part of a public service telephone system and for all commercial uses.

Contemporaneously with this contract the defendant American Telephone & Telegraph Company consented, as was required in the contract, to the extension by the General Electric Company of its acquired rights to the Radio Company.

From these documents it follows that the defendant American Telephone & Telegraph Company having full rights in the patents in suit subject to the reserved licenses of the De Forest Company, granted exclusive licenses to the General Electric Company for certain uses of those patents, and that the Radio Company has licenses from the General Electric Company to use and sell the patented apparatus for "radio purposes" and if the General Electric Company will not provide it with apparatus to make the same.

[fol. 105] The motion does not challenge the bill as defective because of the absence of the General Electric Company and I shall therefore assume without passing on that question that the agreement of November 20, 1919, operated to pass all rights of the General Electric Company, acquired under the contract of July 1, 1920,

to the Radio Corporation. So viewed, all parties are before the court who have any interest in the patents in suit except the De Forest Company, and the interests of that company are merely a non-exclusive and personal right to make, sell and use the inventions for its own profit.

Thus stated, the case seems to me to fall squarely within Gayler v. Wilder, 10 How. 477. In that case, which was an action at law, Wilder, the assignee of a patent for safes, sued in his own name. It was proved that Wilder had given Herring an exclusive right to make and sell the safe in the State of New York, where the infringement occurred. Wilder, however, reserved to himself the right to make safes in New York, and to sell them therein on payment of the same royalty that Herring was to pay him. The Supreme Court held that in order to be an assignment authorizing the licensee to sue in his own name, the license must exclude the licensor and that as Wilder had reserved the right to make and sell safes within New York, he remained the owner and he alone could sue. The authority of that case has remained unshaken to the present time.

While Waterman v. McKenzie, 138 U. S. 252, was a case where the exclusive license was to make and sell but not to use, the result [fol. 106] was the same in a suit in equity. While the patentee had not only reserved the right to use but had not given it to the licensee, the case was treated as an instance of the doctrine laid down in Gayler v. Wilder, supra.

Whether or not Wilson v. Rousseau, 4 How. 646, 686, would be decided in the same way today, the decision depended upon the absence of any right in the licensee to exclude the licensor himself.

The reason usually given for the doctrine is that the infringer will be subject to two suits unless all the parties are joined who have an interest in the patent. Yet, so far as I can see, if the outstanding interest is only a personal right to make, sell and use the invention, there is no possibility of a second suit. The licensor in that case, having no right to exclude anyone, could not sue the infringer. It is true that if the licensee is to make, sell and use the invention for limited purposes, or to make, or sell or use alone, the infringer might be in danger, because the licensee might fail in showing that the defendant's use was within the terms of his license and the defendant would then succeed. Yet such a decree would not protect him from a subsequent suit by the owner for the acts charged as an infringement in the first.

Whether or not the rule is based on any necessity in justice, it is clear that the lower Federal Courts have tried to break its force. Thus in Brush-Swan Co. v. Thomson-Houston Co., 48 Fed. Rep. 224, the exclusive license was to sell only but Judge Shipman allowed [fol. 107] the licensee to join as party plaintiff the owner without its consent. While recognizing the usual rule, he thought that the circumstances justified an exception. The infringer corporation had complete control of the owner through ownership of its stock and forbad- its voluntary joinder as co-plaintiff. This Judge Shipman thought brought the case within the rule of Littlefield v. Perry, 21 Wall. 205.

The doctrine so laid down was extended in the Ninth Circuit to a case where there was no evidence of such control in Brush-Swan Co. v. California etc. Co., 52 Fed. Rep. 945. It was there held that an exclusive licensee though only to use and sell had an implied authority to use the owner's name, though, as I have already said, the result would be to expose the infringer to a possible second suit on the same machine if he had made but not sold or used it. That case has been followed in the Ninth Circuit and was settled law at least until recently, Excelsior Co. v. Allen, 104 Fed. Rep. 553, Excelsior Co. v. Seattle, 117 Fed. Rep. 140. The doctrine appears to have been recognized in the dictum by the Circuit Court of Appeals for the Second Circuit, in Hurd v. James Goold Co., 203 Fed. Rep. 998, though no cases were cited. In that case the license, as appears in Hurd v. Seim 191 Fed. Rep. 832, 834, did not give Hurd the right to sue in his own name. I should not feel justified in disregarding the dictum except for the last case in the Supreme Court.

In Crown v. Nye Tool Works, 261 U. S. 24, the owner had given the plaintiff an express license to sue an infringer on the plaintiff's own behalf. This the licensee did and was defeated for defect of [fol. 108] title. I cannot suppose that this decision turned only upon the failure of the plaintiff to add the name of the owner to the caption, because the whole discussion forbids it and because the bill in that event would certainly not have been dismissed without leave to plead over. The defect was one of substance going to the insufficiency of the plaintiff's title, which could have been cured only by the actual presence in the suit of the owner.

Yet the license there before the Court protected the defendant completely because it assigned all the owner's right as against the infringer in question and the owner could not therefore have maintained suit any better than if he had completely assigned the patent. It was therefore a stronger case for the plaintiff than in the cases of the Ninth Circuit or in Hurd v. James Goold Co., supra. If so, it appears to me that the greater must include the less, and it must be taken as now established that unless the license conforms with the definition given in Waterman v. McKenzie, supra, the licensee may not sue alone.

I cannot regard the mere addition of the owner's name to the caption as a compliance with the rule. If so the Supreme Court has unduly concerned itself with what is no more than a formality. The doctrine has never been put forward as a question of the caption of the suit, but as requiring the actual presence of the owner. The theory evolved in the Ninth Circuit rested upon a supposed right to appear for the owner, implied from the license. In my judgment [fol. 109] it necessarily fell as soon as the Supreme Court held that even an express grant of the right to sue was not enough to give the plaintiff any capacity to sue. I have, of course, nothing to say about the necessity or wisdom of the rule; it is enough that it is settled by the highest Court.

Bill dismissed for lack of parties, with costs.

L. Hand, D. J.

[fol. 110] IN UNITED STATES DISTRICT COURT

[Title omitted]

DECREE

This cause having come on to be heard on the 2nd day of October, 1923, upon the bill of complaint, the bill of particulars and the contracts of which the bill makes profert and upon motion of Pennie, Davis, Marvin & Edmonds, solicitors for defendant, Independent Wireless Telegraph Company, for an order dismissing the bill of complaint, and counsel for the plaintiff, Radio Corporation of America and defendant, Independent Wireless Telegraph Company, having been heard.

It is hereby ordered, adjudged and decreed that said motion be granted and that the bill of complaint herein be, and the same hereby is, dismissed with costs to the defendant, Independent Wireless Telegraph Company to be taxed.

Dated October 22, 1923.

L. Hand, U. S. District Judge.

[fol. 111] IN UNITED STATES DISTRICT COURT

[Title omitted]

PETITION FOR APPEAL—Filed October 24, 1923

To the Honorable Judges of the District Court of the United States for the Southern District of New York, Second Circuit:

The above-named plaintiff, Radio Corporation of America, feeling itself aggrieved by the final decree entered herein on the 22nd day of October, 1923, dismissing the bill of complaint herein on the ground of lack of parties with costs to the defendant, Independent Wireless Telegraph Company, hereby appeals to the United States Circuit Court of Appeals for the Second Circuit from said decree for the reasons specified in its assignment of errors filed herewith; and prays that this appeal may be allowed and that a citation be granted directed to the above-named defendant, Independent Wireless Telegraph Company, commanding it to appear before the said [fol. 112] United States Circuit Court of Appeals, and to do and receive what may appertain to justice to be done in the premises; and that a transcript, duly authenticated, of the record, exhibits and proceedings herein as pertains to the subject-matter of this appeal may be transmitted with this appeal to the said United States Circuit Court of Appeals.

Radio Corporation of America, by Sheffield & Betts, Its Solicitors.

IN UNITED STATES DISTRICT COURT

ORDER ALLOWING APPEAL—October 24, 1923

An appeal bond in the sum of Two hundred and fifty ($250.00) Dollars having been filed by the plaintiff, Radio Corporation of America, herein, American Surety Company of New York, being surety thereon, and said bond having been duly approved, it is hereby

Ordered that the above petition for appeal be and the same hereby is allowed.

L. Hand, United States District Judge.

[fol. 113] IN UNITED STATES DISTRICT COURT

[Title omitted]

ASSIGNMENT OF ERRORS—Filed October 24, 1923

And now comes the above named plaintiff Radio Corporation of America by its solicitors, and presents with its accompanying petition for appeal from the final decree entered herein on the 22nd day of October, 1923, the following assignment of errors:

1. In holding that the plaintiff Radio Corporation of America, upon refusal of the De Forest Radio Telephone & Telegraph Company, actually to join as a co-plaintiff, was not entitled to join the latter company as such party without its expressed consent, in view of the fact that that company was not within the jurisdiction of the Court.

2. In holding that the plaintiff, De Forest Radio Telephone & Telegraph Company was not before the Court.

[fol. 114] 3. In holding that the mere addition of the name of the De Forest Radio Telephone & Telegraph Company to the caption of the bill of complaint was not a compliance with the rule that the patent owner must be a party to the suit.

4. In holding that the patent owner in the case of Crown Die and Tool Company vs. Nye Tool and Machine Works, 261 U. S. 24, had given to the plaintiff therein an express or any license.

5. In holding that the question involved in the motion of the defendant Independent Wireless Telegraph Company to dismiss the bill of complaint herein has been settled by the United States Supreme Court adversely to the Contentions of the plaintiff Radio Corporation of America.

6. In holding that the plaintiff De Forest Radio Telephone & Telegraph Company was the owner of the legal title to the De Forest Letters Patent in suit Nos. 841,387 and 879,532.

7. In dismissing the bill of complaint herein.

Wherefore, and for divers other reasons from the record of this cause appearing, said plaintiff Radio Corporation of America prays that the said decree of the District Court for the Southern District of New York may be reversed.

Sheffield & Betts, Solicitors for Radio Corporation of America.

[fols. 115 & 116] CITATION—In usual form, showing service on Penny, Davis, Marvin & Edmons; omitted in printing

[fols. 117-126] BOND ON APPEAL FOR $250—Approved and filed October 24, 1923; omitted in printing

---

[fol. 127] IN UNITED STATES DISTRICT COURT

[Title omitted]

STIPULATION AS TO PARTS OF RECORD TO BE PRINTED—Filed October 26, 1923

It is hereby stipulated and agreed by and between the solicitors for the respective parties herein, subject to the approval of the Court, that the portions of the record, exhibits and proceedings in the above-entitled suit to be incorporated in and to form the printed transcript of record on appeal of this cause to the United States Court of Appeals for the Second Circuit shall consist of the following:

1. Bill of complaint.

2. Order of District Court, dated August 24, 1923, on motion of defendant Independant Wireless Telegraph Company for bill of particulars.

3. Bill of particulars of plaintiff Radio Corporation of America, dated August 28, 1923.

4. Copies of the following agreements referred to in said bill of particulars:

(a) Agreement dated March 16, 1917, between De Forest Radio [fol. 128] Telephone & Telegraph Company and Western Electric Company, Inc.

(b) Agreement dated May 24, 1917, signed by Western Electric Company, Inc.

(c) Agreement dated November 19, 1920, between General Electric Company and Radio Corporation of America.

(d) Agreement dated July 1, 1920, between General Electric Company and American Telephone & Telegraph Company.

(e) "Extension Agreement" dated July 1, 1920, between General Electric Company, Radio Corporation of America, American Telephone & Telegraph Company and Western Electric Company, Inc.

5. Notice of motion and motion to dismiss bill of complaint made by defendant Independant Wireless Telegraph Company and dated September 20, 1923.

6. Opinion of L. Hand, United States District Judge, dated October 13, 1923.

7. Final decree dismissing bill of complaint, dated October 22, 1923.

8. Appeal papers including petition and order for appeal, assignment of errors, citation on appeal, and appeal bond.

9. This stipulation and the order thereon.

10. Stipulation as to correctness of record and clerk's certificate.

Dated New York, N. Y., October 25, 1923.

[fol. 129] Sheffield & Betts, Solicitors for Plaintiff-Appellant Radio Corporation of America. Pennie, Davis, Marvin & Edmonds, Solicitors for Defendant-Appellee Independent Wireless Telegraph Company.

The foregoing stipulation is hereby approved.

L. Hand, United States District Judge.

[fol. 130] IN UNITED STATES DISTRICT COURT

[Title omitted]

STIPULATION RE TRANSCRIPT OF RECORD

It is hereby stipulated and agreed that the foregoing is a true transcript of the record of the said District Court in the above entitled matter, as agreed upon by the parties.

Dated November —, 1923.

Sheffield & Betts, Solicitors for Plaintiff Radio Corporation of America. Pennie, Davis, Marvin & Edmonds, Solicitors for Defendant Independent Wireless Telegraph Company.

[fol. 131] IN UNITED STATES DISTRICT COURT

[Title omitted]

CLERK'S CERTIFICATE

I, Alexander Gilchrist, Jr., Clerk of the District Court of the United States of America for the Southern District of New York, do hereby

certify that the foregoing is a correct transcript of the record of the said District Court in the above entitled matter as agreed upon by the parties.

In testimony whereof, I have caused the seal of the said Court to be hereunto affixed at the City of New York, in the Southern District of New York, this — day of November, in the year of our Lord, One thousand nine hundred and twenty-three, and of the Independence of the United States, the one hundred and forty-eighth.

Alex. Gilchrist, Jr., Clerk. (Seal.)

[fol. 132] In United States Circuit Court of Appeals for the Second Circuit

Radio Corporation of America, Plaintiff-Appellant, Impleaded with De Forest Radio Telephone & Telegraph Company, Plaintiff,

against

Independent Wireless Telegraph Company, Defendant-Appellee, Impleaded with American Telephone & Telegraph Company, Defendant

Before Rogers, Manton and Mayer, Circuit Judges

Opinion

Appeal from the United States District Court for the Southern District of New York. Suit for infringement of U. S. Letters Patent No. 841,387 and 879,531, by the Radio Corporation of America, [fol. 133] impleaded with De Forest Radio Telephone & Telegraph Company, plaintiffs, against Independent Wireless Telegraph Company, impleaded with American Telephone & Telegraph Company, defendants. From a decree dismissing the bill of complaint, the Radio Corporation of America ap-eals. Decree reversed.

L. F. H. Betts, Esq., Counsel for Appellant. William H. Davis, Esq., Willis H. Taylor, Jr., Esq., Counsel for Appellee.

Manton, Circuit Judge:

The bill of complaint was dismissed below on a motion made by the appellee, Independent Wireless Telegraph Company. The suit is for infringement by the Independent Wireless Telegraph Company of the De Forest audion United States patents Nos. 841,387 and 879,531. The inventions were assigned by De Forest to the interpleaded plaintiff company and it granted an exclusive license to the Western Electric Company, which granted the right to make, use and sell the inventions in suit for the term of their existence, subject to a license theretofore given to the defendant American Telephone & Telegraph Company. The De Forest Company, how-

ever, reserved certain non-exclusive, non-transferable and personal licenses to make and sell the patented apparatus for specific pur- [fol. 134] poses which are immaterial here. The Western Electric Company assigned all its rights in the contract to the American Telephone & Telegraph Company and therefore all the interest in the patent in suit, except that reserved by the De Forest Company, vested in the American Telephone & Telegraph Company. Later, the General Electric Company made a contract with the Radio Corporation of America by which it granted to it an exclusive license to use and sell for radio purposes all inventions then owned by it or thereafter acquired. The agreement defined radio purposes as a transmission or reception of communications by what are known as electro magnetic waves, but not wire. It appears from the bill of complaint that at this time the General Electric Company had no interest in the patents in suit, but on July 1, 1920, after the agreement, the defendant American Telephone & Telegraph Company and the General Electric Company entered into a contract by which they exchanged rights in the various patents or applications owned or controlled by them. By that contract, there was conferred upon the General Electric Company (a) a non-exclusive license to make wireless apparatus for the United States; (b) an ex-lusive license in the field of wireless telegraphy; (c) an exclusive license to make, use and sell wireless telephone apparatus for communication between automotive vehicles, except railways; (d) an exclusive license to make, use and sell such apparatus for amateur purposes or where the business use is incidental or where one of the stations is portable; (e) an exclusive license to make, sell and use wireless telephone apparatus for elec- [fol. 135] tric light, power and traction companies. At the same time, the American Telephone & Telegraph Company consented to the extension by the General Electric Company of its rights acquired to the appellant. Thus the American Telephone & Telegraph Company having full rights in the patents in suit, subject to the reserved licenses of the De Forest Company, granted exclusive licenses to the General Electric Company for certain uses of these patents, and the appellant has licenses from the General Electric Company to use and sell the patented apparatus for radio purposes and if the General Electric Company will not provide it with apparatus to make the same.

The reason given for the dismissal was the lack of parties to the bill of complaint. We held in Radio Corporation of America vs. Emerson (decided January 7, 1924) that under the agreements found in that record, which are the same as contained in this record, the Radio Corporation is the exclusive licensee of the patents here in suit. The argument there was that it was not the owner of the patents and as it was only a non-exclusive licensee, it was not a proper party. There the De Forest Company made claim to the patents and voluntarily asserted that claim as such party. We said that its interest could be determined at final hearing and that to permit it to remain a party plaintiff was not prejudicial to any of the other complainants. And we said:

[fol. 136] "Indeed, it is a protection to the appellants in any possible future claim which the De Forest Company might base on acts of infringement if it should eventually turn out to have some ownership in the patents."

We held that the appellant acquired an exclusive license to use and sell devices and vacuum tubes in the fields therein specified in the agreements under the De Forest patents in suit, and we said:

"It gave the Radio Corporation the sole right to use and sell radio devices and vacuum tubes employing the inventions in suit in the fields above described where toll or profit was made; in other words, for commercial communication between ships, airplanes and automotive devices. The owner of the patents and all others were excluded from such fields. The Radio amateur field is covered by a license to sell the patent devices or tubes granted to the Radio Corporation with some reservations to sell under limited conditions to the De Forest Company. With the exception of the personal non-exclusive and non-transferable license of the De Forest Company, the Radio Corporation's interest or right in this field is also exclusive. We regard these interests of the Radio Corporation as property rights and such exclusive interests and rights were apparently very valuable. The Radio Corporation is therefore in the [fol. 137] position of an exclusive licensee under the De Forest patents."

The question on this appeal differs from that presented on the Emerson appeal only in that there the De Forest Company was a willing party plaintiff, whereas here it is made a party plaintiff without its express consent. Since it refused consent here, as is set forth in the twenty-fifth paragraph of the bill of complaint, it was permissible for the appellant to name the De Forest Company as a party plaintiff under the doctrine of Brush-Swan Co. vs. Thomson-Houston Co. (48 Fed. 224), Brush-Swan Co. vs. California, etc. (52 Fed. 459) and Herd vs. Jas. Goold Co. (203 Fed. 998). An exclusive licensee may maintain an action in equity in his name and that of the owner of the patent right and may prosecute his claim without the co-operation, indeed, against the objection of the owner. (Chisholm vs. Johnson, 106 Fed. 191; Walker on Patents, Fifth Ed. §400). The instant bill of complaint was not signed or verified by or on behalf of the De Forest Company and its solicitors, and it is argued that therefore the suit is not brought in the name of such company within the meaning of the statute and rule established in the foregoing cases, and that a decision in this suit would not protect the appellees against further suits by the De Forest Company, and further, it is said that the appellant is not such an exclusive licensee as can avail itself of the rules set forth in the foregoing cases. Equity Rule 25 provides that

[fol. 138] "If special relief pending the suit is desired the bill should be verified by the oath of the plaintiff, or someone having knowledge of the facts upon which such relief is asked."

The De Forest Company here is named not only in the caption, but also in the bill as a party plaintiff. The bill is signed and verified by the appellant and signed by one of its solicitors. Such a verification by the appellant complies with both the terms and spirit of Rule 25. The name of the De Forest Company might have been signed by the appellant or its solicitors as its agents under the implied power given by the patent owner when he granted an exclusive license. The failure to sign the bill by it under the power of attorney can be corrected by amendment if there were need therefor. We pointed out in the Emerson case that there was no just fear of a successful second suit against the appellees on account of the acts charged in the bill of complaint as infringements by or on behalf of the De Forest Company. If such a suit were started, the appellant as exclusive licensee, would be a necessary party thereto. (Birdsell vs. Shaliol, 112 U. S. 884; Daimler vs. Conklin, 145 Fed. 956.) A decision in the present case would be res adjudicata as against any such suit. We have heretofore held that appellant's license entitles it to sue in the name of the patent owner and this disposes of the last argument of the appellee. (Radio Corp. vs. Emerson, supra.)

Decree reversed.

[fols. 139 & 140] IN UNITED STATES CIRCUIT COURT OF APPEALS

[Title omitted]

JUDGMENT—March 10, 1924

This cause came on to be heard on the transcript of record from the District Court of the United States, for the Southern District of New York, and was argued by counsel.

On consideration whereof, it is now hereby ordered, adjudged, and decreed that the decree of said District Court be and it hereby is reversed with costs.

It is further ordered that a Mandate issue to the said District Court in accordance with this decree.

H. W. R.

M. T. M.

Endorsed: United States Circuit Court of Appeals.—Second Circuit.—Radio Corporation of America v. Independent Wireless Telegraph Company.—Order for Mandate.—United States Circuit Court of Appeals.—Second Circuit.—Filed Mar. 10, 1924.—William Parkin, Clerk.

[fol. 141] IN UNITED STATES CIRCUIT COURT OF APPEALS

CLERK'S CERTIFICATE

I, William Parkin, Clerk of the United States Circuit Court of Appeals for the Second Circuit, do hereby Certify that the foregoing

pages, numbered from 1 to 140 inclusive, contain a true and complete transcript of the record and proceedings had in said Court, in the case of Radio Corporation of America, Impleaded, etc., Plaintiff-Appellant, against Independent Wireless Telegraph Company, Impleaded, etc., Defendant-Appellee, as the same remain of record and on file in my office.

In testimony whereof, I have caused the seal of the said Court to be hereunto affixed, at the City of New York, in the Southern District of New York, in the Second Circuit, this 21st day of March in the year of our Lord One Thousand Nine Hundred and twenty-four and of the Independence of the said United States the One Hundred and forty-eighth.

Wm. Parkin, Clerk. (Seal of United States Circuit Court of Appeals, Second Circuit.)

[fol. 142] IN SUPREME COURT OF THE UNITED STATES

On Petition for Writ of Certiorari to the United States Circuit Court of Appeals for the Second Circuit

ORDER GRANTING CERTIORARI—Filed October 13, 1924

On consideration of the petition for a writ of certiorari herein to the United States Circuit Court of Appeals for the Second Circuit, and of the argument of counsel thereupon had, as well in support of as against the same, it is now here ordered by this Court that the said petition be, and the same is hereby, granted, the record already on file as an exhibit to the petition to stand as a return to the writ.